APE BF BB

APELO Tap Range
Apelo Bath Filler Brushed Brass

Specification

Product Type:	Bathroom Taps
Main Construction Material:	Brass
Mount Type:	Deck
Handle Type:	Long Angled
Connection Inlet:	3/4" BSP
Connection Outlet:	Housed M24 Aerator
Number of Tap Holes:	2
Valve/Cartridge Type:	3/4" Short Stem Ceramic Disc Valve
Plumbing System Requirements:	Suitable for all plumbing systems
Minimum Dynamic Pressure (bar):	0.2 bar
Maximum Dynamic Pressure (bar):	5 bar
Maximum Hot Water Temperature °C:	60°C
Maximum Static Pressure (bar):	10 bar
Flow Type:	Single
Isolation Included:	No

Features:

- Long life ceramic cartridge for added durability and ease of use
- Metal fixing nut for added durability
- Flexible tails included
- Supplied in a Brushed Brass finish
- 10 year guarantee

Dimensions (measurements in mm)

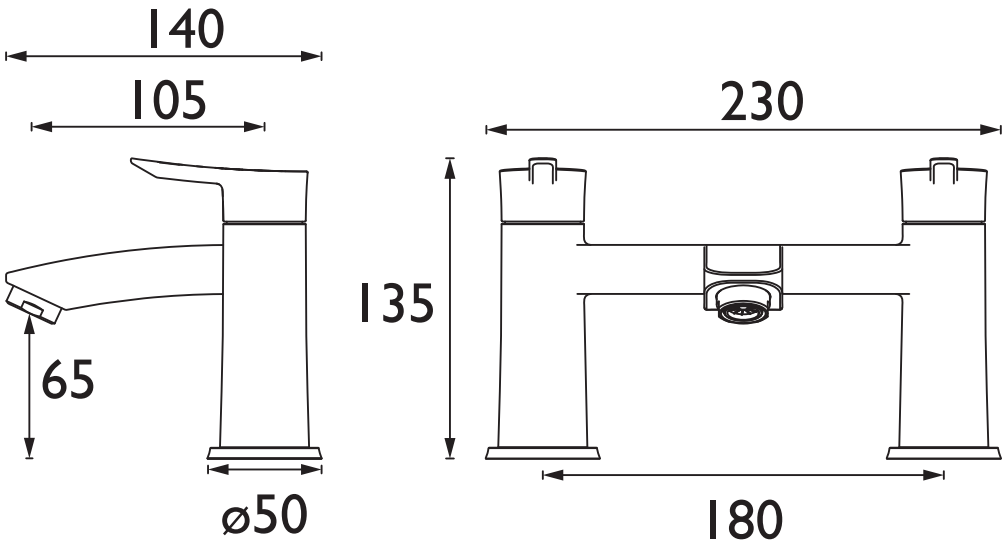

Product Certifications:

For more products, visit our website:
http://www.bristan.com

Flow Rates (l/min)

System Pressure (bar)	0.2	0.5	1	2	3	5
APE BF C (mixed)	24.2	40.4	57.2	80.9	99	127.9

TECHNICAL DATA SHEET

TOP QUALITY 10 YEARS GUARANTEED *

BRISTAN

D1

Bristan, Birch Coppice Business Park, Dordon, Tamworth, B78 1SG. Web Site: www.bristan.com Telephone: 0330 026 6273. Email: enquire@bristan.com.

* - **10 year guarantee applies to products purchased on or after 01/04/2021. Non-chrome product finishes carry a 3 year guarantee on finish.** See www.bristan.com/guarantees for more information. The information contained on this page was correct at date of issue. Fitting Dimensions are provided as a guide only. Some variation may occur due to manufacturing tolerances. Bristan pursues a policy of continuous improvement in design and performance of its products and so reserves the right to change specifications without prior notice.