BRISTAN

Installation Instructions & User Guide

Please leave these instructions with the end user

Product Code: EZI6 SHXSMCTFF C (D2)

Specifications

Working Pressures

Min: 0.3 bar **Max:** 5.0 bar

Maximum Static Pressure: 10.0 bar

Inlet Water Temperature

Cold Water Supply

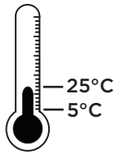

Min: 5°C **Max:** 25°C

Hot Water Supply

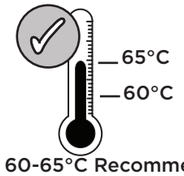

60-65°C Recommended

Factory pre-set 38°C

⚠ IMPORTANT
The inlet hot water must be at least 10°C above the required blend temperature.

Inlet Dimensions

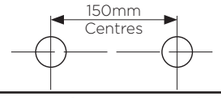

Inlet Connections

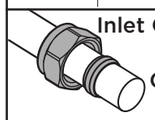

15mm Compression

TMV Type 2 Designation

HP-S

Tools You'll Need

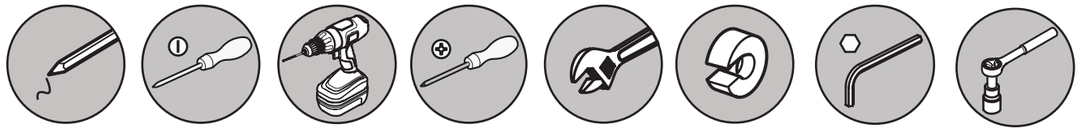

Pencil | Flat head Screwdriver | Drill | Cross head Screwdriver | Spanner | Pipe Cutter | Hexagonal Keys | Socket Spanner

Prior to Installation

All products manufactured and supplied by Bristan are safe to use provided that they are installed, operated and receive regular maintenance in accordance with these instructions.

This product needs to be installed in accordance with, and meet the requirements of the Water Supply (Water Fittings) Regulations 1999 and current by-laws. For full Installation Requirements & Notes (IRN) please visit **wras.co.uk/directory.**

Isolation valves must be fitted to the inlet water supplies to ensure ease of future maintenance. Before installing this product the water supply must be thoroughly flushed in order to remove any swarf, solder etc. Full access must be made available for future maintenance/ servicing purposes.

Before drilling into walls, check that there are no hidden electrical wires, cables or water supply pipes. This can be checked with the aid of an electronic detector.

If power tools are used do not forget to:
- Wear eye protection
- Unplug equipment after use

This product must not be modified in any way as this will invalidate the guarantee.

If in doubt, contact a registered plumber, your Local Water Authority or the Secretary of the Institute of Plumbing, address as follows:-

The Institute of Plumbing,
64 Station Lane,
Hornchurch,
Essex,
RM12 6NB, Tel: 01708 472791

Pack Contents

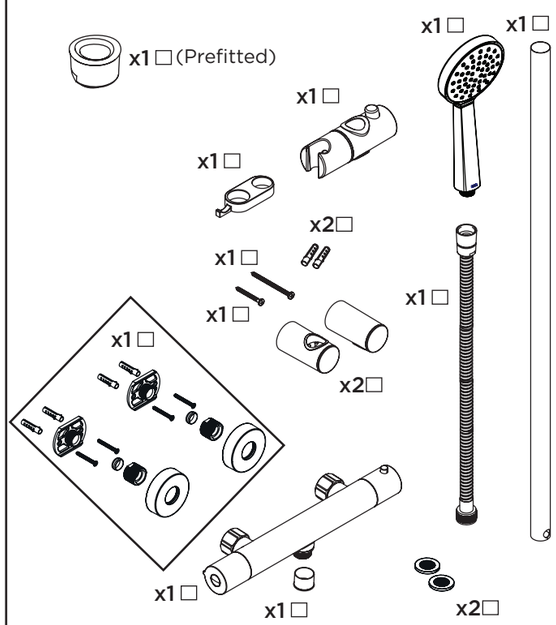

Installation

1

Identify the required position of the valve and prepare the water supply pipes. Supply pipes should be 150mm apart.

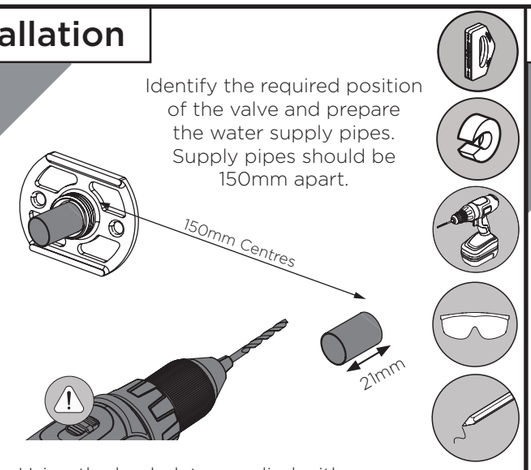

Using the backplate supplied with the wall mount, mark and drill holes.

2

Secure the backplate into place. Secure the screws into the wall.

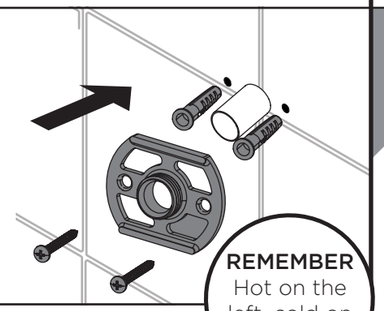

REMEMBER
Hot on the left, cold on the right.

3

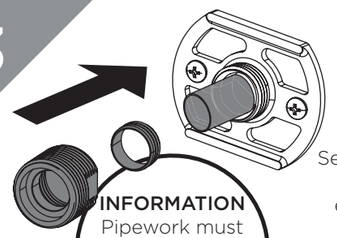

Secure the wall bridges onto the backplate ensuring the olive is positioned over the pipework correctly.

INFORMATION
Pipework must not protrude past the olive by more than 5mm

4

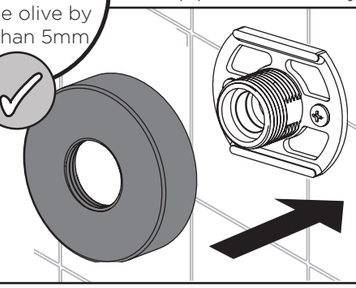

Screw shrouds to the wall bridges.

5

Insert the filter washers and secure the shower to the wall mount.
You can now commission your shower.

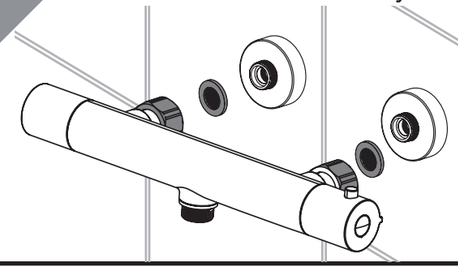

IMPORTANT
Please refer to the TMV booklet for commissioning and testing guidance.

Riser Installation

6

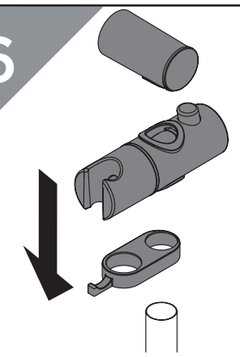

Assemble the riser, attaching the hose retainer, soap dish, slider and both the top and bottom brackets

7

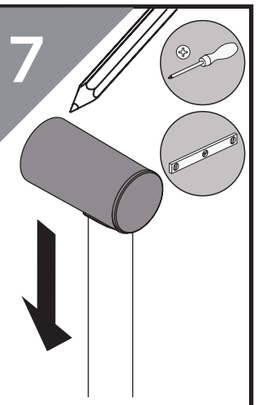

Use the assembled riser to mark the desired position for the riser on the wall.

8

Drill the marked holes

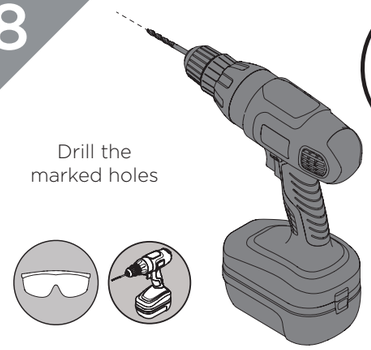

REMEMBER
To service your product!

9

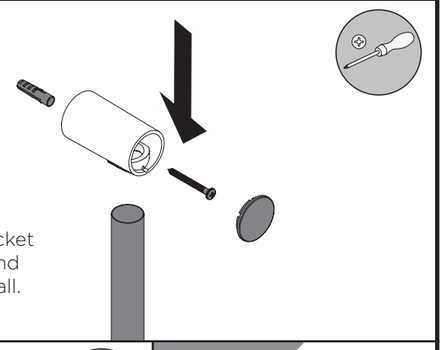

Slide top bracket onto riser and secure to wall.

10

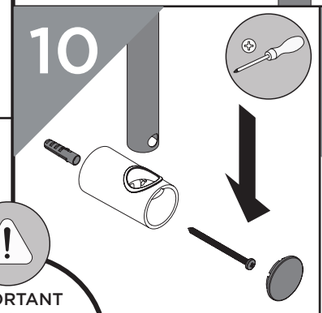

Insert riser rail into lower bracket, securing to the wall.

11

Slide hose through hose retainer before attaching the handset to the shower.

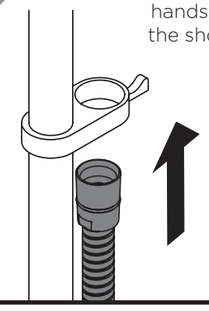

Operation

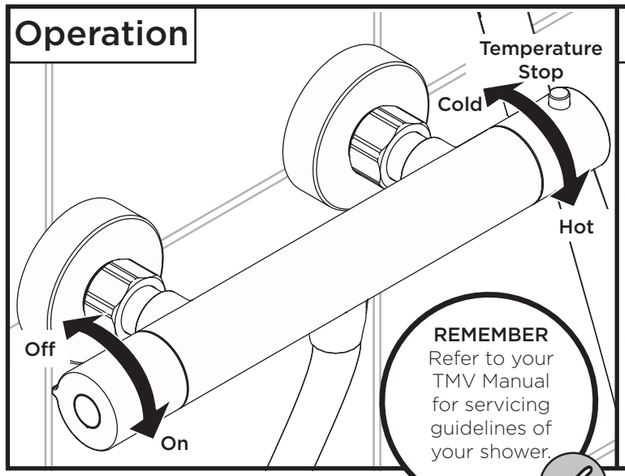

REMEMBER
Refer to your TMV Manual for servicing guidelines of your shower.

General Cleaning

Bristan products are made from premium materials, with hand polished, PVD, EPD or electroplated finishes.

Your product should be regularly cleaned with warm water, a mild pH-neutral liquid soap, and polished with a soft cloth. Any residues from soap, toothpaste, shampoos and shower gels can cause blemishes if not rinsed off straight after use.

Household bleaches and cleaners contain harsh chemicals and may damage the surface finish. Avoid using abrasive cloths, scouring pads, scrub sponges, steel wool or anything similar.

Some surfaces such as nickel and pewter may be affected by the dye found in some cloths, so it is also important to avoid hanging cloths on surfaces.

Temperature Setting

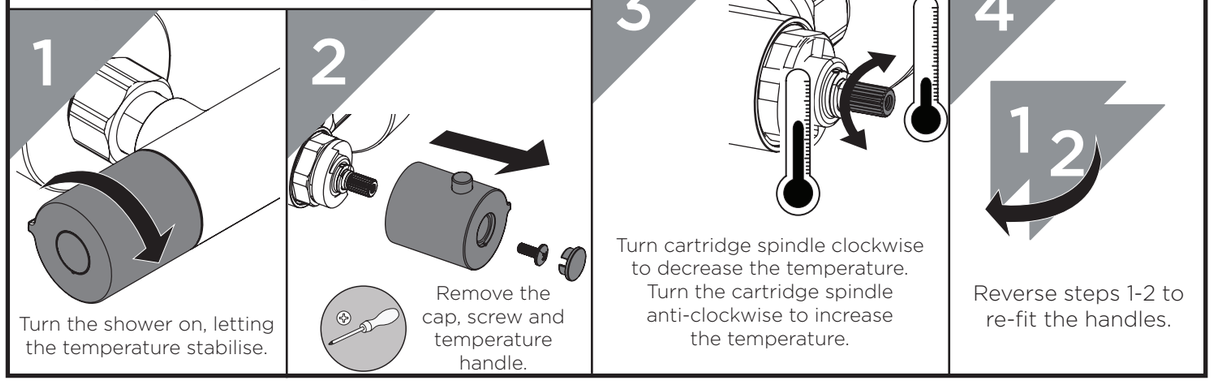

Maintenance - Cartridge Cleaning

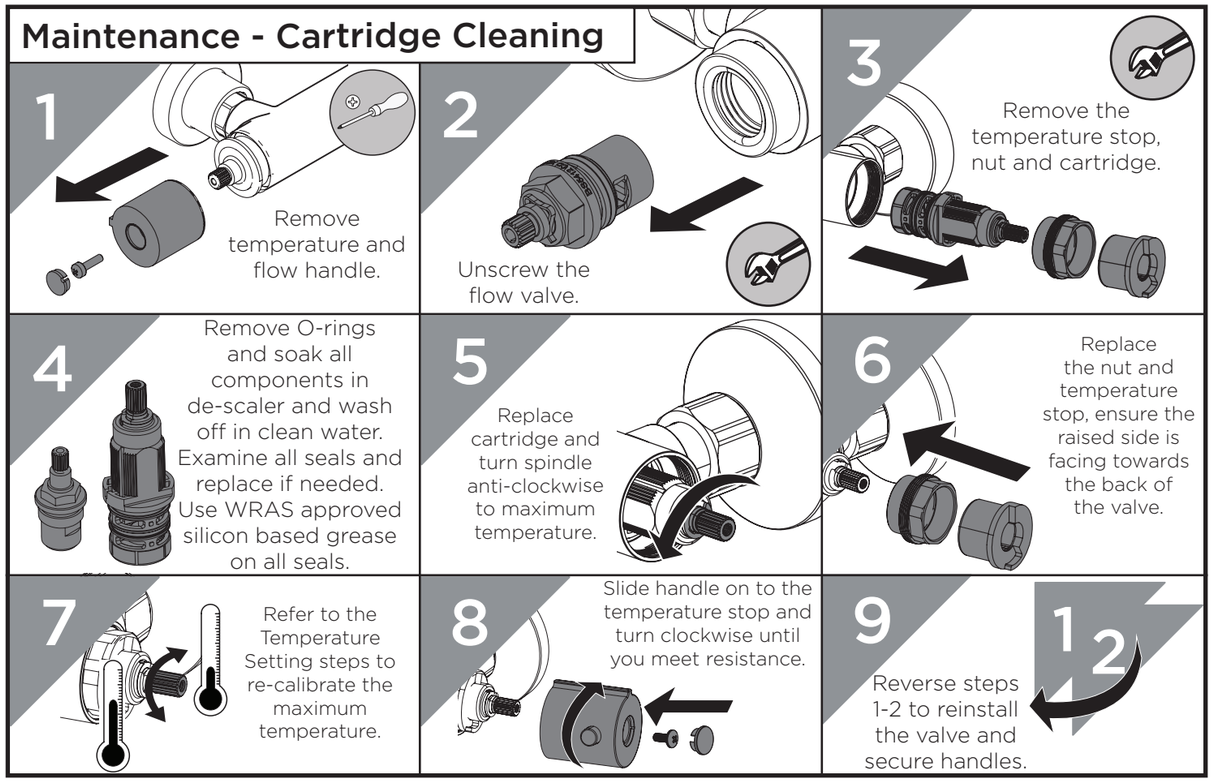

Troubleshooting

Symptom	Cause	Remedy
No flow or low flow rate	Partially closed isolation valve.	Open isolation valve.
	Instantaneous water heater cycles on and off as flow rate or pressure is too low.	Increase water flow rate or pressure through system.
	Head of water is below the minimum distance required.	Refer to the specification for the minimum distance required.
	Are the water supply pressures balanced?	If pressures are unbalanced, a pressure reducing valve should be used for optimum performance.
	Hot or cold water being drawn off elsewhere causing pressure changes or instantaneous boiler temperature changes.	Do not use other water outlets when using the shower.
	Airlock or partial blockage in the supply pipework.	Flush through pipework and filters to ensure removal of debris and any airlocks.
	Hot/Cold water supply has failed	Check the hot and cold feeds. The shower will not work if either fails.
Maximum Water Temperature too Hot/Cold	Maximum Water Temperature needs adjusting.	Refer to the Temperature Setting section to set your desired maximum temperature. Note: increasing the water temperature may cause the valve to be out of TMV guidelines, refer to your TMV Handbook for more information.
Outlet Water Temperature too Hot/Cold	Filter/pipe blockage	Flush through pipework and filters to ensure removal of debris and any airlocks.
	Installtion conditions outside operating parameters.	Refer to the specification for the minimum distance required.
	Hot water temperature is less than 10C above the required blend temperature	Adjust hot water temperature or wait for water to reheat if a stored water system is used.
	Instantaneous water not igniting because the water flow rate is too low.	Increase water flow rate through the system. Refer to the Maintenance section to clean/check the cartridge and filters for any damage. Contact your boiler manufacturer.
	Instantaneous water not igniting because the water pressure is too low.	Refer to the specification for system requirements. Increase water pressure through the system. Contact your boiler manufacturer.
Only hot/ cold water from Shower Valve	Inlet water supplies are reversed.	Check the water inlet connections are the correct way around: Hot on the X, Cold on the X when viewed from teh front. Rework pipework as necessary.
	Filter/pipe blockage	Flush through pipework and filters to ensure removal of debris and any airlocks.
Water dripping from shower	This is normal for a short time after using the shower.	This is caused by residual water tension, the build up of water in the shower.
	If water continues to drip, possibly due to the cartridge	Remove cartridge and clean, refer to 'Maintenance' section before starting any maintenance.
Shower does not turn on	Closed isolation valve.	Open isolation valve.
	Mains water supply turned off.	Turn on mains water supply.

Our Guarantee

At Bristan, we want to make things as easy as possible for our customers. That's why we offer solid guarantees on all our products, effective from the date of purchase, to give you peace of mind.

To start your free guarantee simply scan the QR code and register your product. Alternatively visit **www.bristan.com/register.**

For any other queries, please call our Customer Service on **0330 026 6273** where our expert team of advisors will be able to offer you any help and advice.

For full guarantee terms and conditions visit **www.bristan.com/service-centre/guarantees**.

Bristan Group Ltd.

UK: Bristan Group, B78 1SG.
EU: Masco Europe S.à.r.l., 14 Rue Strachen 6933 Mensdorf, Luxembourg.

Customer Service: +44330 026 6273
Web: www.bristan.com
Email: enquire@bristan.com

A Masco Company

BRISTAN