BRISTAN

Installation Instructions & User Guide

Please leave these instructions with the end user

CNN EFSNK Range (D7)

Specifications

Dynamic Water Pressure

Min: 0.3 bar **Max:** 5.0 bar

Maximum Static Pressure: 10.0 bar

Inlet Water Temperature

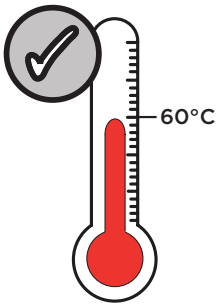

Maximum Hot 60°C

Inlet Connections

1/2" BSP
Flexible Tails with Isolation Valves

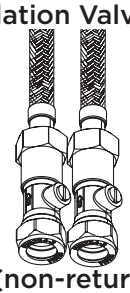

(non-return valves included)

Outlet

Housed M24 Flow Straightener

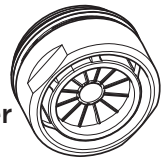

Max Worktop Depth

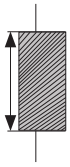

35mm

Pack Contents

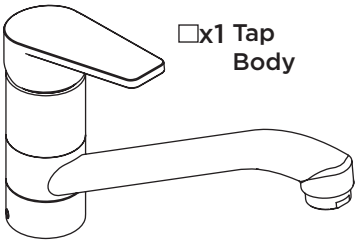

☐x1 Tap Body

Grub Screws (1 spare) ☐x3

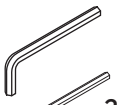

6mm Hex Key ☐x1

2.5mm Hex Key ☐x1

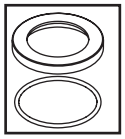

Plinth & Seal ☐x1

Grease Tube ☐x1

EasyFit Base ☐x1

☐x1 Reinforcing Plate (Optional)

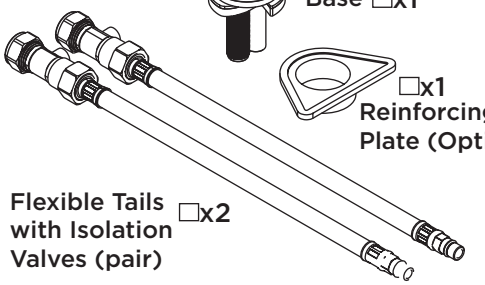

Flexible Tails with Isolation Valves (pair) ☐x2

Operation

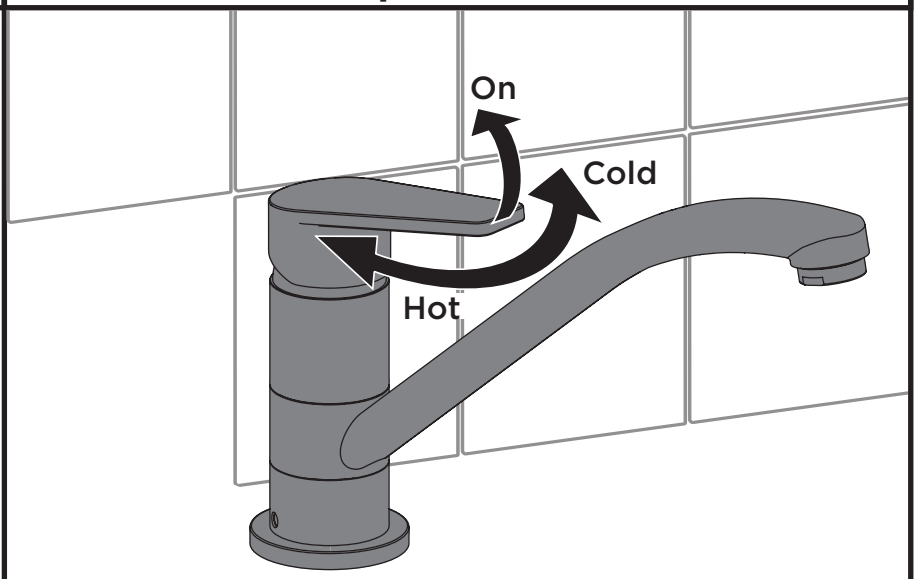

Flexible Connecting Pipes

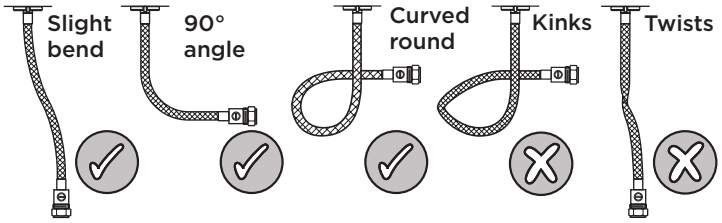

Tools Required for Installation/ Maintenance

Adjustable Spanner

Hexagonal Key (Grub screws)

Hexagonal Key (Base)

Spanner (Cartridge)

Prior to Installation

All products manufactured and supplied by Bristan are safe to use provided that they are installed, operated and receive regular maintenance in accordance with these instructions.

This product needs to be installed in accordance with, and meet the requirements of The Water Supply (Water Fittings) Regulations (Northern Ireland) 2009 and The Water Supply (Water Fittings) (Scotland) Byelaws 2014. For full Installation Requirements & Notes (IRN) please visit **www.wrasapprovals.co.uk/approvals-directory**

Isolation valves must be fitted to the inlet water supplies to ensure ease of future maintenance.

Before installing this product the water supply must be thoroughly flushed in order to remove any swarf, solder etc. Full access must be made available for future maintenance/servicing purposes.

This product must not be modified in any way as this will invalidate the guarantee.

Choose Your Instruction Route

Depending on the thickness of the surface you are installing your EasyFit tap to, will mean that you have to install it in a different way.

If your surface is **8mm or under,** follow the steps for **surfaces 8mm or less.** If your surface is **over 8mm,** follow the steps for **surfaces greater than 8mm.**

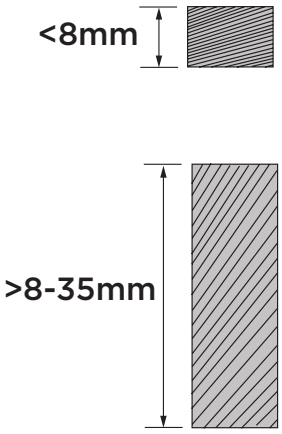

Spare Parts

To replace any spare parts for your tap, why not scan the QR Code or visit **www.bristan.com** and search for your product.

Maintenance - Replacing Cartridge

1

Remove cap and grub screw. Remove handle.

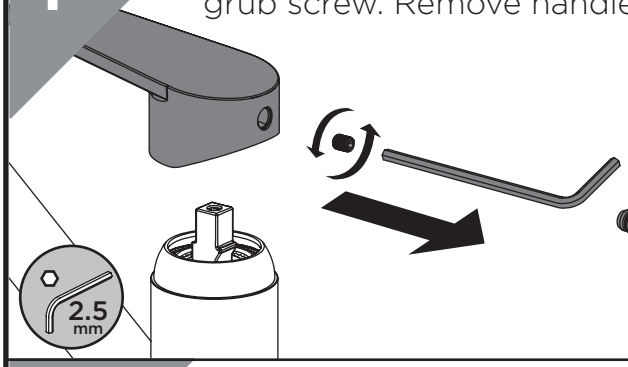

2

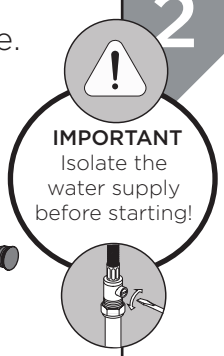

Remove shroud and retaining nut. Remove cartridge.

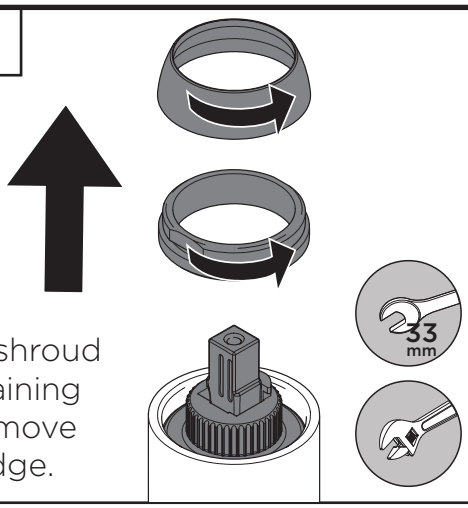

3

To replace any spare parts for your tap, scan the QR Code or visit **www.bristan.com** and search for your product.

4

Reverse the steps to replace the cartridge, nut, shroud and handle.

5

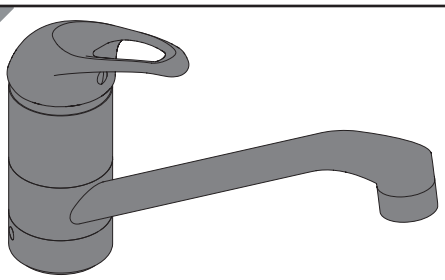

Turn on the mains water supply, letting the water flow for a few minutes to flush through the system.

Check all joints and connections for any leaks.

Maintenance - Cleaning/Replacing Outlet

1

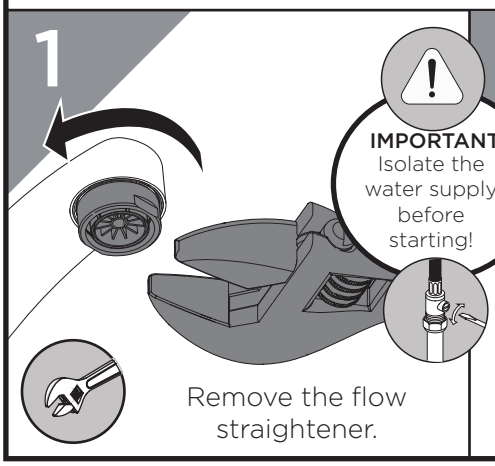

Remove the flow straightener.

2

Clean and replace as necessary using a suitable solution.

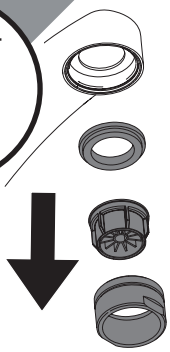

3

Secure the flow straightener.

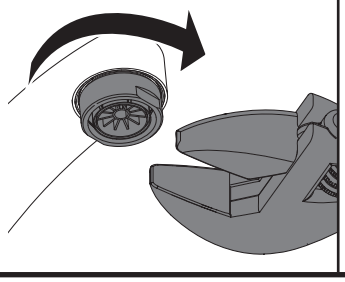

4

Turn on the mains water supply, letting the water flow for a few minutes to flush through the system.

Notes

Notes

Please use this space for any notes you or your installer may have regarding the installation/ plumbing of this product.

Contact Us

BRISTAN

Part of BRISTAN GROUP

Bristan Group Ltd.

UK: Bristan Group, B78 1SG.
Customer Service: +44330 026 6273
Web: www.bristan.com
Email: enquire@bristan.com

EU: FM Mattsson AB (publ)
Box 480
SE-792 27 Mora
Sweden
Email: info@fmmattssongroup.com

Our Guarantee

At Bristan, we want to make things as easy as possible for our customers. That's why we offer solid guarantees on all our products, effective from the date of purchase, to give you peace of mind.

To start your free guarantee simply scan the QR code and register your product.
Alternatively visit www.bristan.com/register.

For any other queries, please call our Customer Service on 0330 026 6273 where our expert team of advisors will be able to offer you any help and advice.
For full guarantee terms and conditions visit **www.bristan.com/service-centre/guarantees**.

IMPORTANT

Images shown are for illustrative purposes only.
The tap you have purchased may look different to those pictured in these instructions, but will follow the same installation steps.
Your contents page will be specific to your product.
If you find your product or any of it's components differ from those shown on the contents page, please contact our Customer Support on - 0330 026 6273.

Installation - surface thickness 8mm or less

1

Remove the protective cap.
Using the large hex key, turn anti-clockwise and undo the base until the bottom plate is level with the end of the thread.

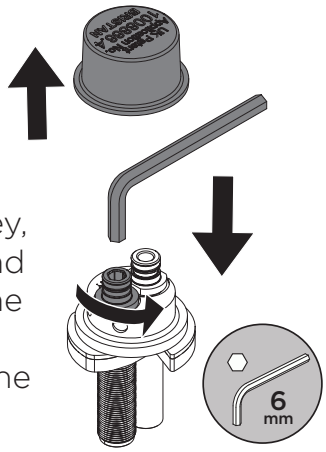

2

Remove the plain inlet and feed the base through the tap fixing hole from the top.

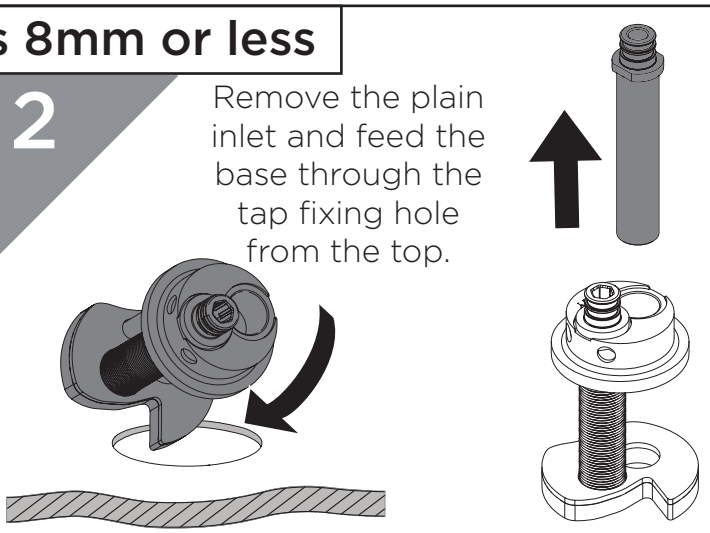

3

Insert the plain inlet feed as shown, with the straight edge meeting the middle of the base.

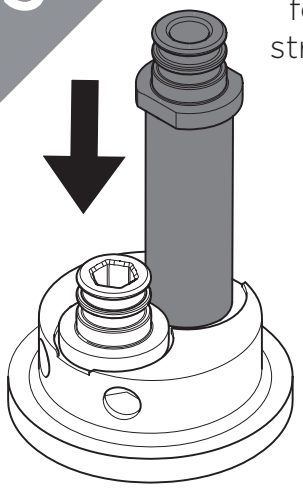

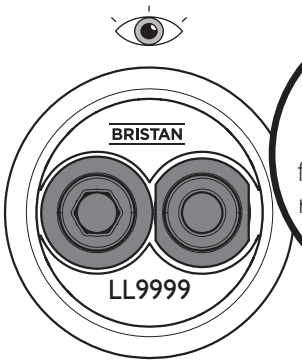

WARNING
Failure to align the plain inlet feed correctly will result in improper installation.

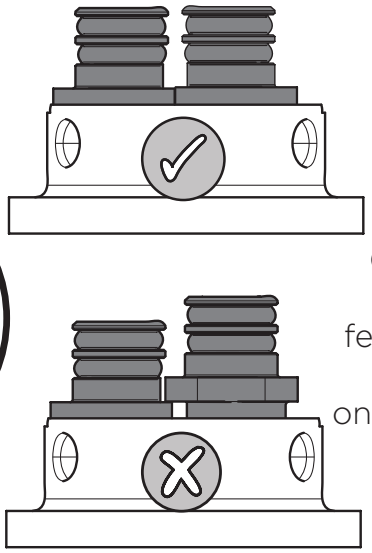

Check the plain inlet feed is sitting correctly on to the base.

4

Standard Fit

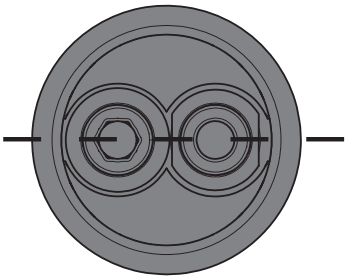

To have side lever taps facing forward

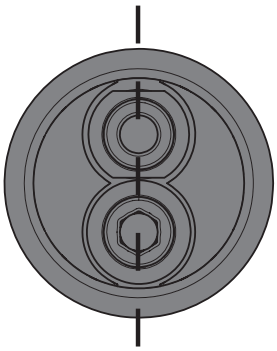

IMPORTANT
Failure to do so will mean your tap will not be straight on the surface fitted

Align the base in a straight line horizontally or vertically depending on preference.

Installation - surface thickness 8mm or less continued

5

Whilst steadying the base by hand, insert the large hex key and turn clockwise to tighten the base.

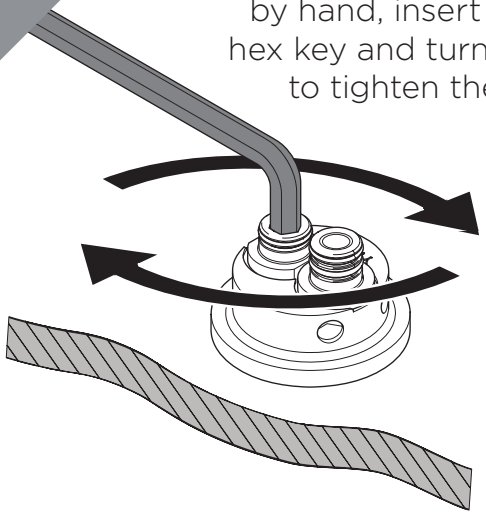

6

Grease the O-Rings using the grease provided.

7

Ensuring the holes line up, **push your tap fully down onto the base**.

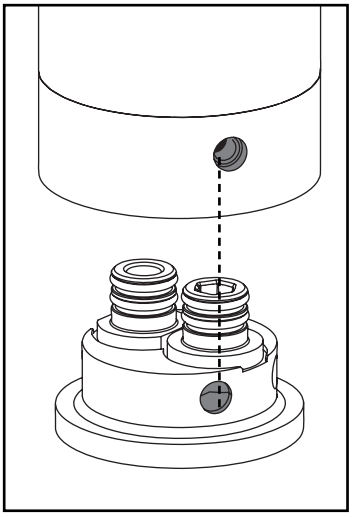

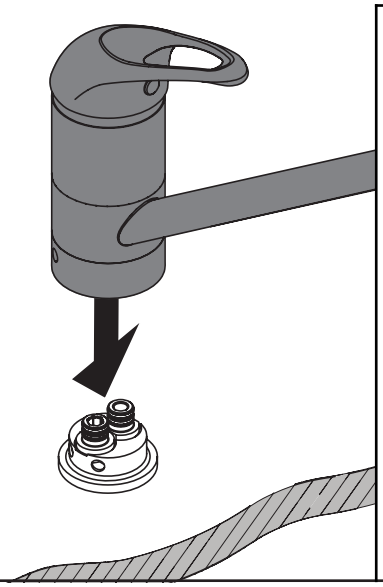

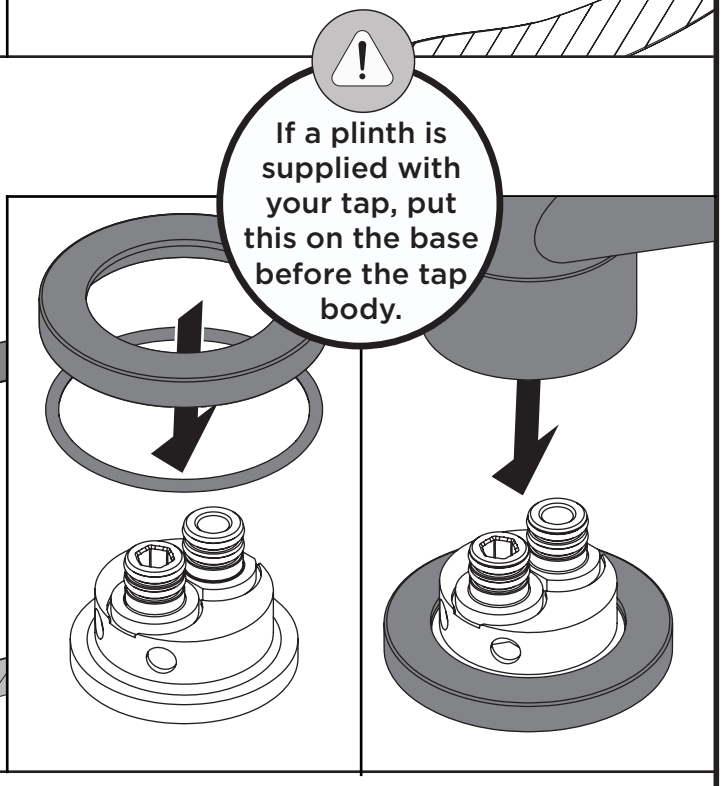

8

WARNING
Failure to push down the tap body fully will result in insecure installation.

Check the tap body to make sure there is no visible gap at the base of the tap. If there is, review the previous steps to make sure there are no misalignments.

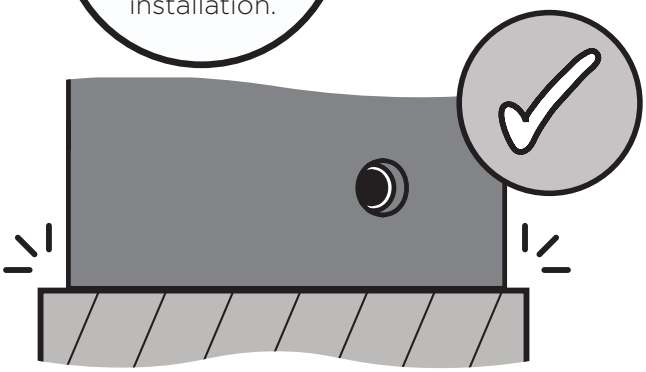

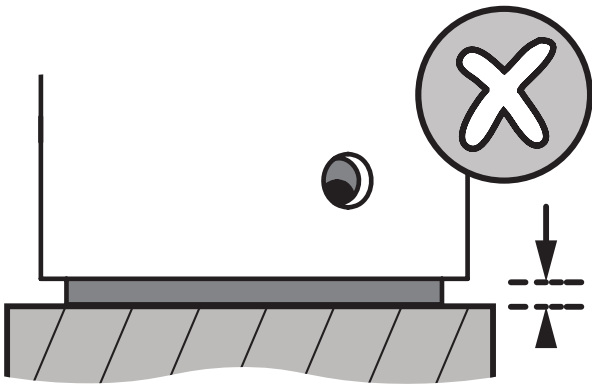

Installation - surface thickness 8mm or less continued

9

IMPORTANT - Insert the plug on your sink to avoid dropping the grub screws down the hole during installation. A spare grub screw is also provided with your tap if needed.

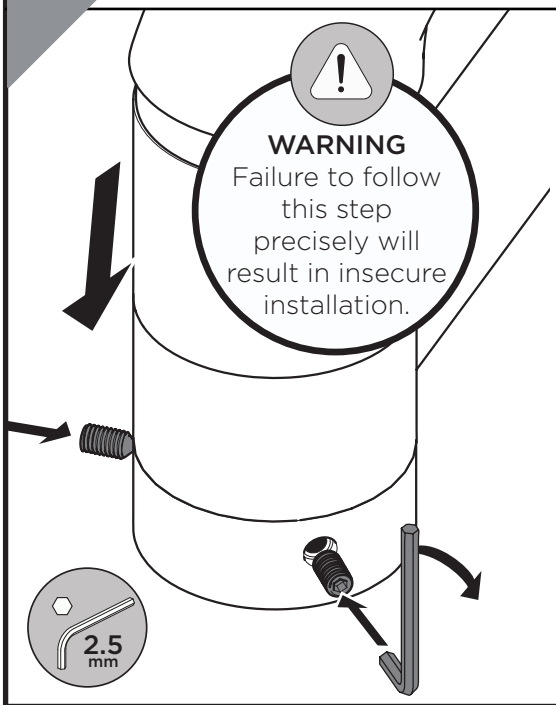

Continuing to apply downward pressure, insert the first grub screw into the tap and **tighten until a physical stop.**

Repeat for second grub screw.

Tighten the first grub screw again with an extra 1/2 turn.

Repeat for second grub screw.

Check first grub screw is still secure and then the second.

Tighten as needed following the instructions above.

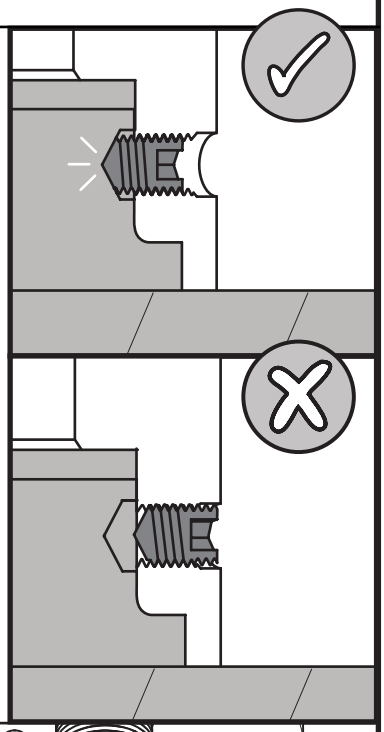

10

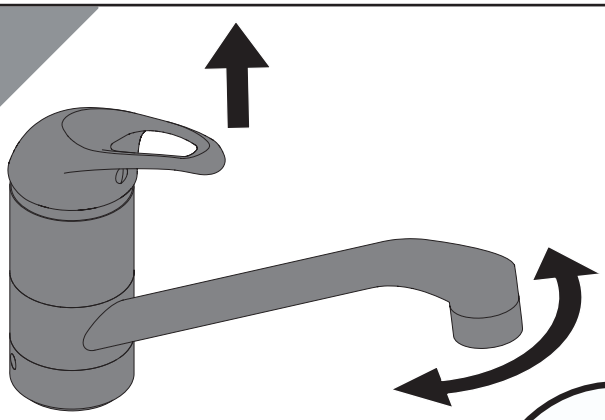

Operate the tap and check that it doesn't flex on the surface.
If you feel the tap requires more support, go to **Installation - with Reinforcing Plate.**

REMEMBER hot on the left, cold on the right when viewing the base from the front.

11

Screw the flexible tails into the base.

DO NOT OVER-TIGHTEN

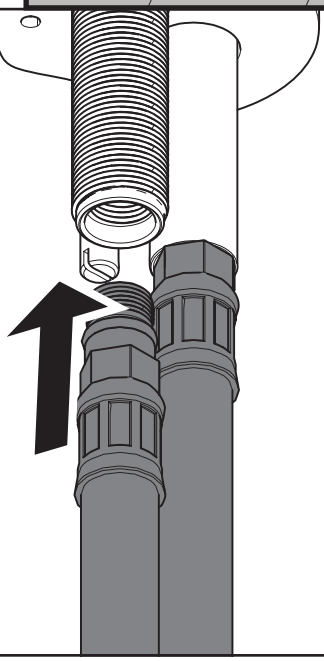

12

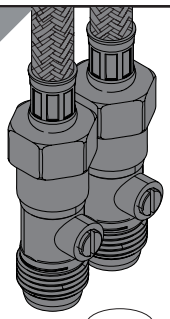

Connect the hot and cold water connections.

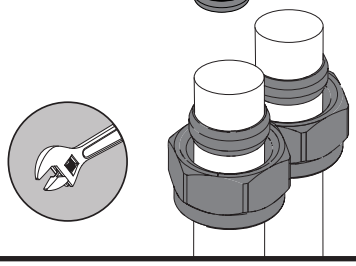

Olive

Compression Nut

13

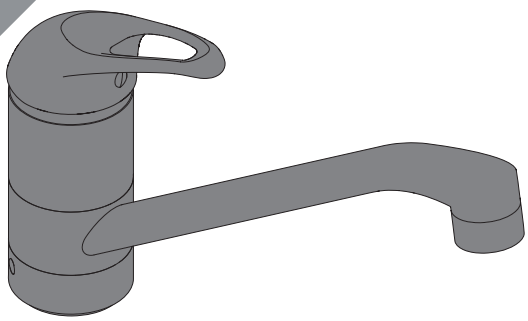

Turn on the isolation valves and check the tap and all joints/connections for any leaks. Check the tap sits flush to the surface fitted and that screws are tight. Your tap is now ready to use.

Installation - surface thickness greater than 8mm

1

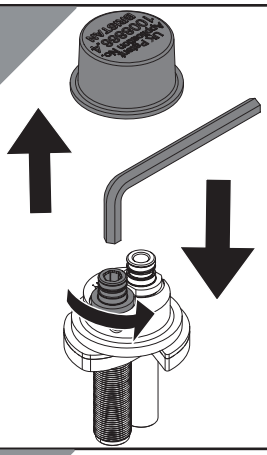

Remove the protective cap. Using the large hex key, turn anti-clockwise and remove the bottom plate.

2

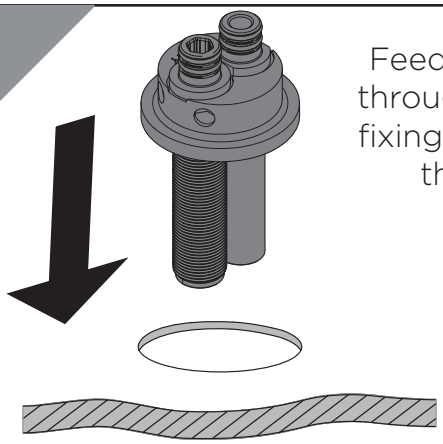

Feed the base through the tap fixing hole from the top.

3

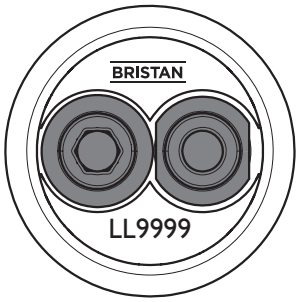

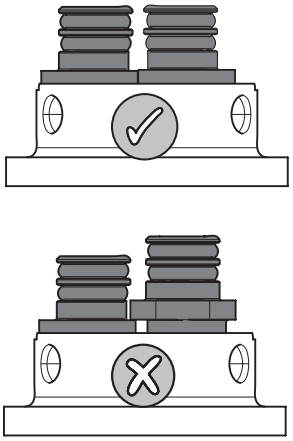

Check the plain inlet feed is sitting correctly on to the base.

WARNING
Failure to align the plain inlet feed correctly will result in improper installation.

4

Standard Fit

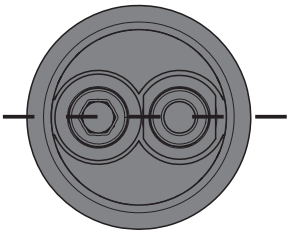

To have side lever taps facing forward

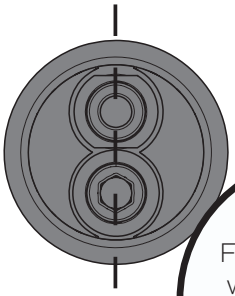

Align the base in a straight line horizontally or vertically depending on preference.

IMPORTANT
Failure to do so will mean your tap will not be straight on the surface fitted

5

Feed the Bottom Plate up to the underside of the surface.

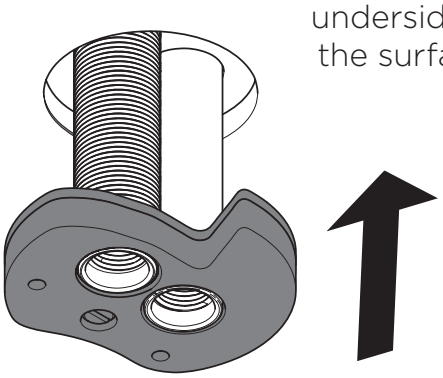

Whilst steadying the base by hand, insert the large hex key and turn clockwise to tighten the base.

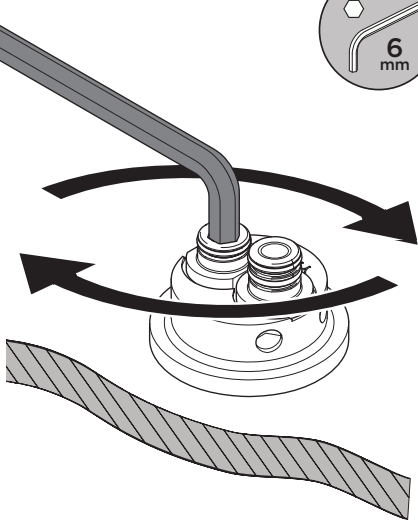

6

Grease the O-Rings using the grease provided.

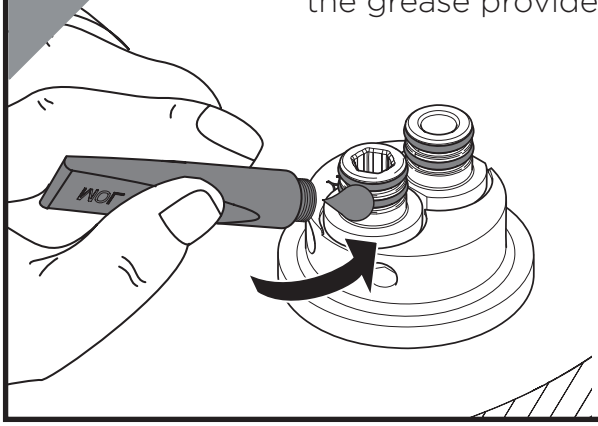

Installation - surface thickness greater than 8mm continued

7

Ensuring the holes line up, **push your tap fully down onto the base**.

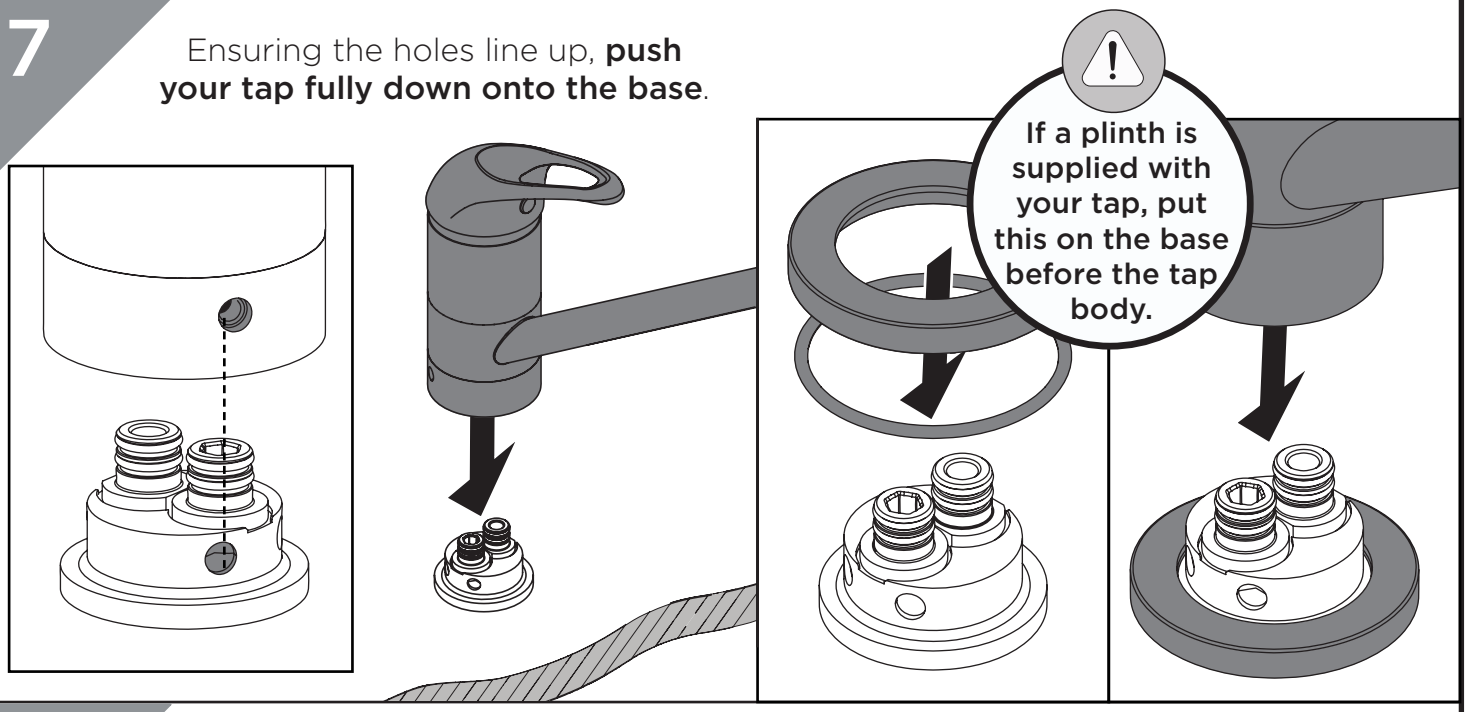

8

Check the tap body to make sure there is no visible gap at the base of the tap. If there is, review the previous steps to make sure there are no misalignments.

9

IMPORTANT - Insert the plug on your sink to avoid dropping the grub screws down the hole during installation. A spare grub screw is also provided with your tap if needed.

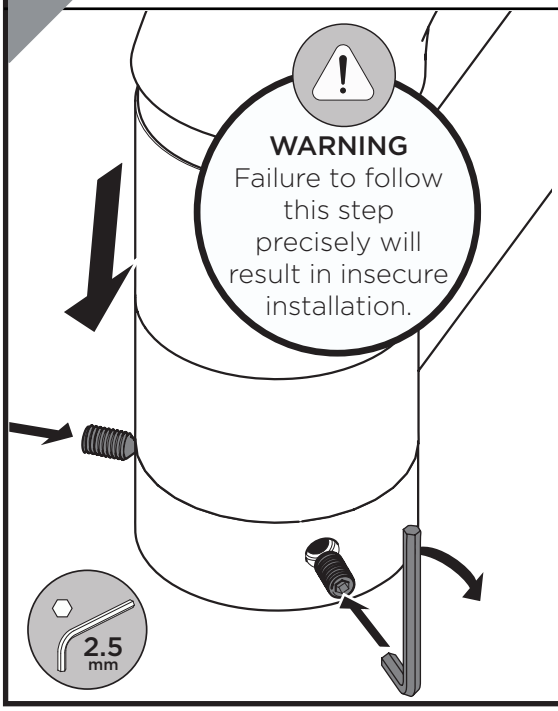

Continuing to apply downward pressure, insert the first grub screw into the tap and **tighten until a physical stop.**

Repeat for second grub screw.

Tighten the first grub screw again with an extra 1/2 turn.

Repeat for second grub screw.

Check first grub screw is still secure and then the second.

Tighten as needed following the instructions above.

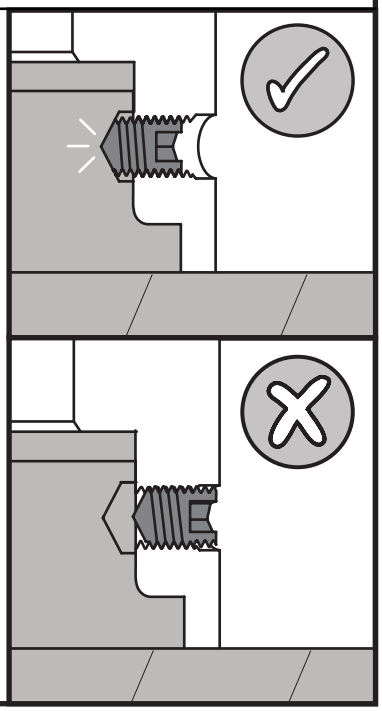

Installation - surface thickness greater than 8mm continued

10

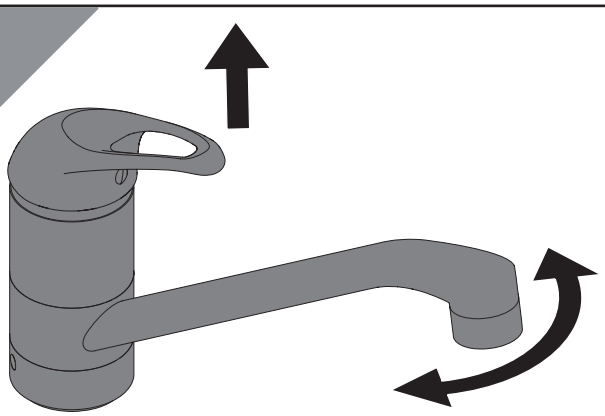

Operate the tap and check that it doesn't flex on the surface.
If you feel the tap requires more support, go to **Installation - with Reinforcing Plate.**

11

Screw the flexible tails into the base.

DO NOT OVER-TIGHTEN

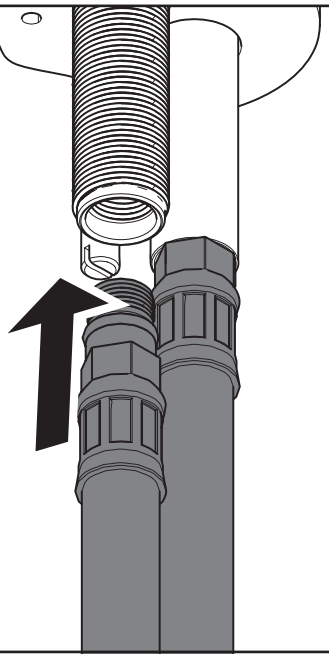

REMEMBER hot on the left, cold on the right when viewing the base from the front.

12

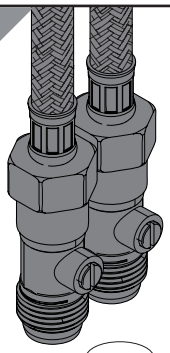

Connect the hot and cold water connections.

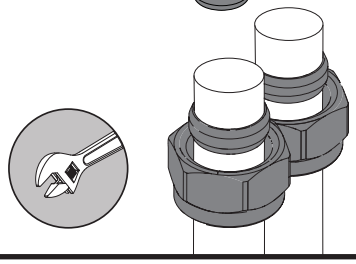

13

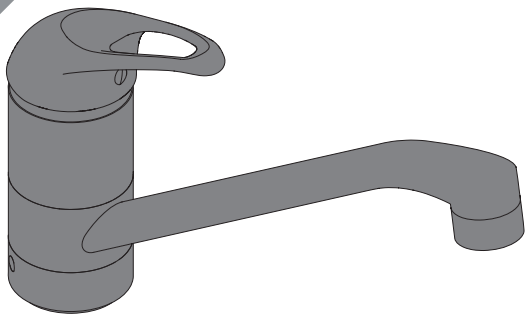

Turn on the isolation valves and check the tap and all joints/connections for any leaks. Check the tap sits flush to the surface fitted and that screws are tight. Your tap is now ready to use.

Installation with Reinforcing Plate

1

Remove the protective cap if starting from the beginning.

Using the large hex key, turn anti-clockwise and remove the bottom plate.
Skip to Step 3 if following after Installation - surface thickness 8mm or less.

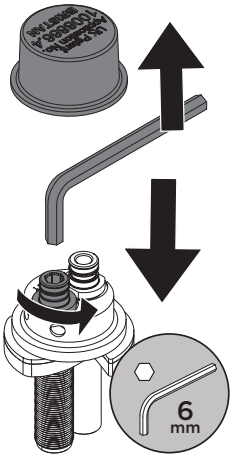

2

Feed the base through the sink hole from the top.

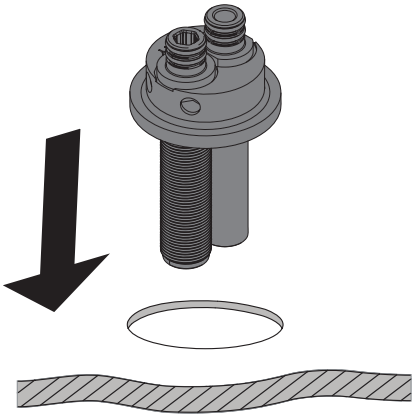

3

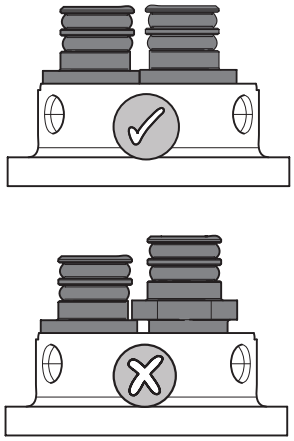

Check the plain inlet feed is sitting correctly on to the base.

WARNING
Failure to align the plain inlet feed correctly will result in improper installation.

4

Align the base in a straight line horizontally or vertically depending on preference.

Standard Fit

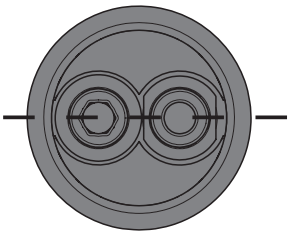

To have side lever taps facing forward

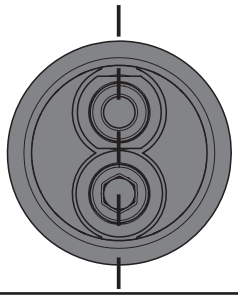

IMPORTANT
Failure to do so will mean your tap will not be straight on the surface fitted

5

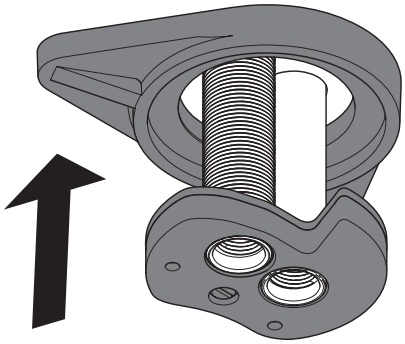

Feed the Reinforcing Plate and Bottom Plate up to the underside of the surface

Whilst steadying the base by hand, insert the large hex key and turn clockwise to tighten the base.

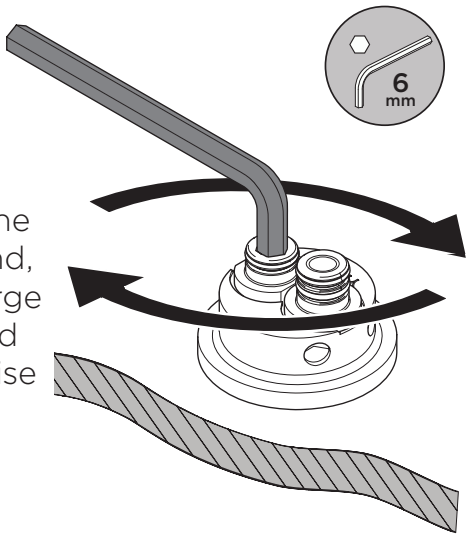

6

Grease the O-Rings using the grease provided.

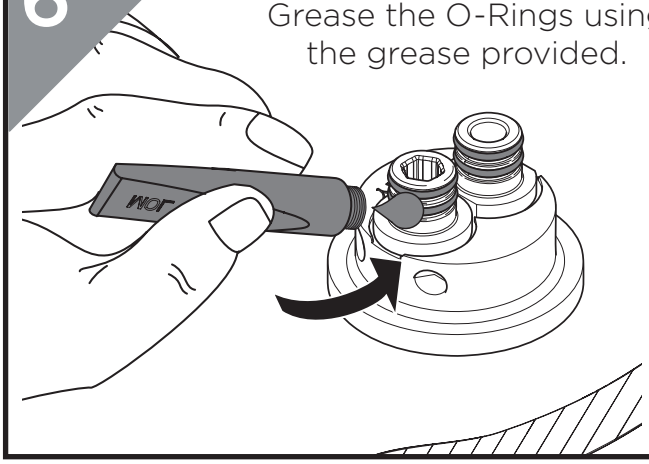

Installation with Reinforcing Plate continued

7

Ensuring the holes line up, **push your tap fully down onto the base**.

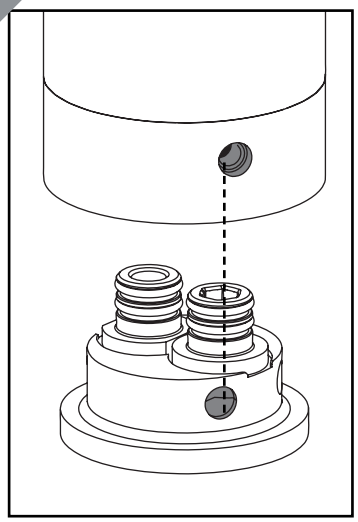

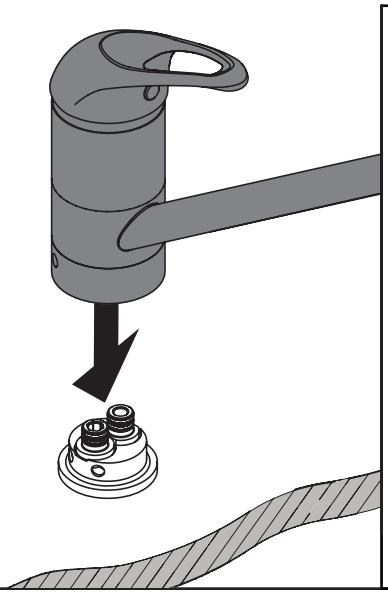

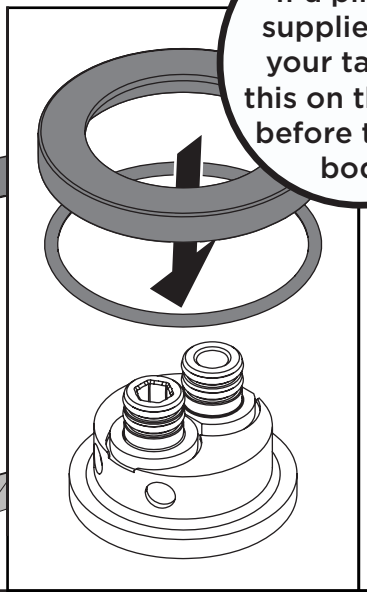

If a plinth is supplied with your tap, put this on the base before the tap body.

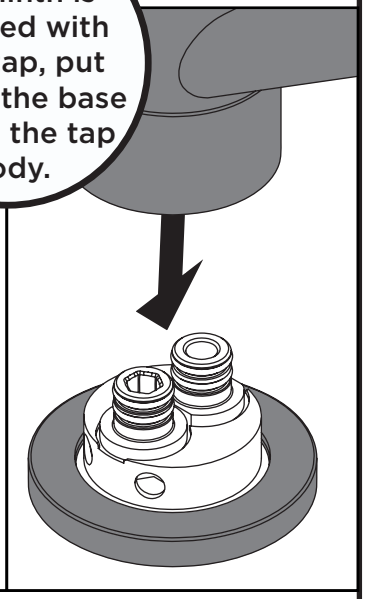

8

Check the tap body to make sure there is no visible gap at the base of the tap. If there is, review the previous steps to make sure there are no misalignments.

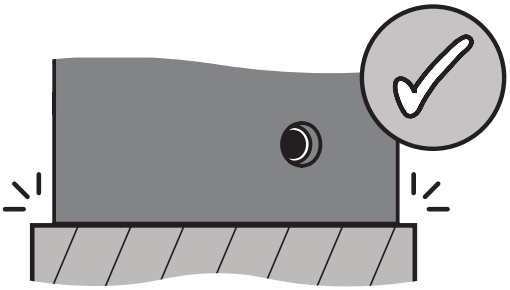

WARNING
Failure to push down the tap body fully will result in insecure installation.

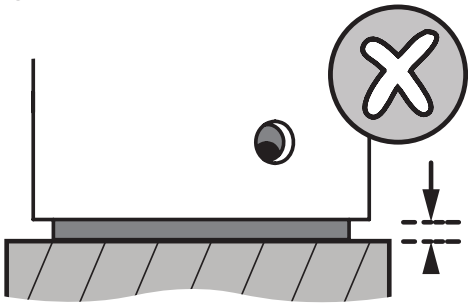

9

IMPORTANT - Insert the plug on your sink to avoid dropping the grub screws down the hole during installation. A spare grub screw is also provided with your tap if needed.

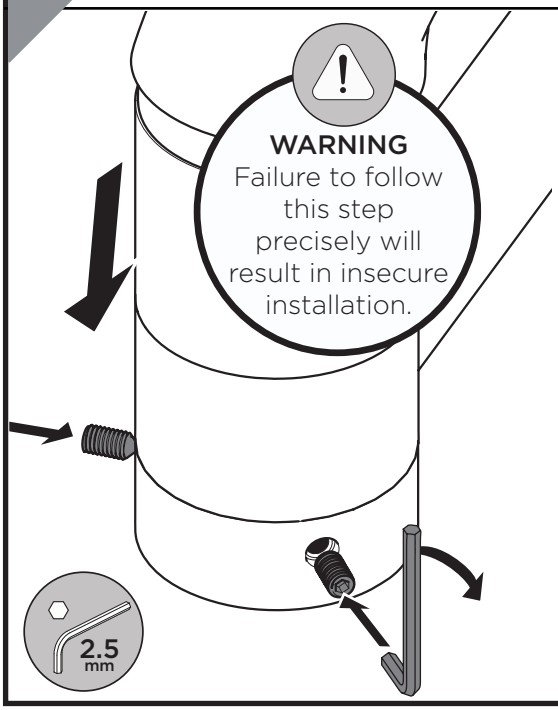

WARNING
Failure to follow this step precisely will result in insecure installation.

Continuing to apply downward pressure, insert the first grub screw into the tap and **tighten until a physical stop.**

Repeat for second grub screw.

Tighten the first grub screw again with an extra 1/2 turn.

Repeat for second grub screw.

Check first grub screw is still secure and then the second.

Tighten as needed following the instructions above.

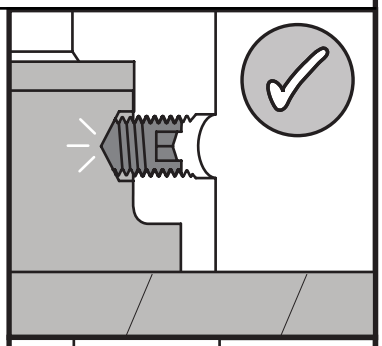

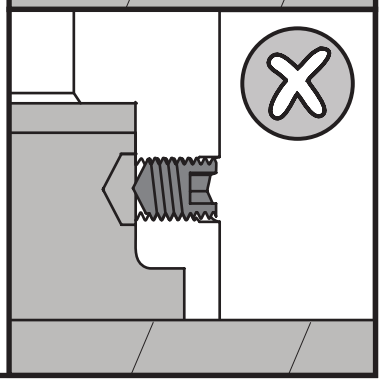

Installation with Reinforcing Plate continued

10

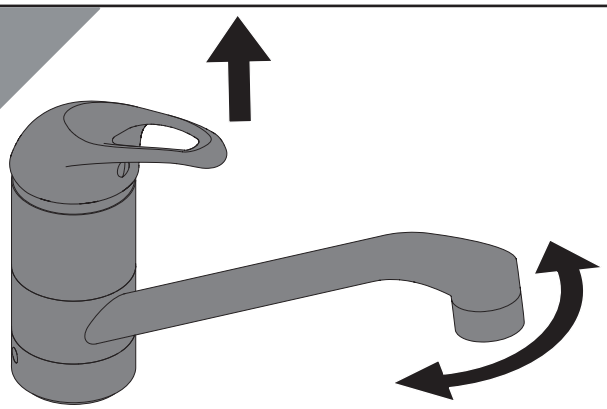

Operate the tap and check that it doesn't flex on the surface.

11

Screw the flexible tails into the base.

DO NOT OVER-TIGHTEN

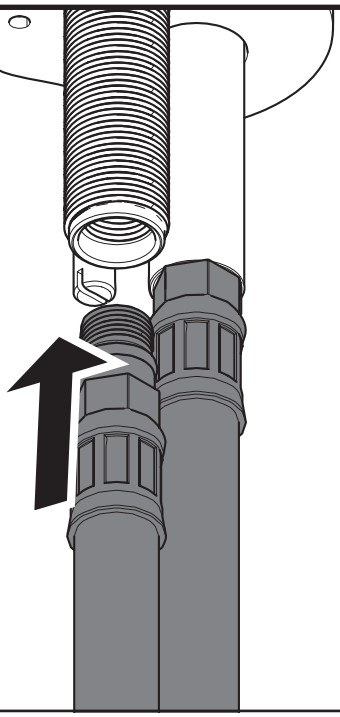

REMEMBER hot on the left, cold on the right when viewing the base from the front.

12

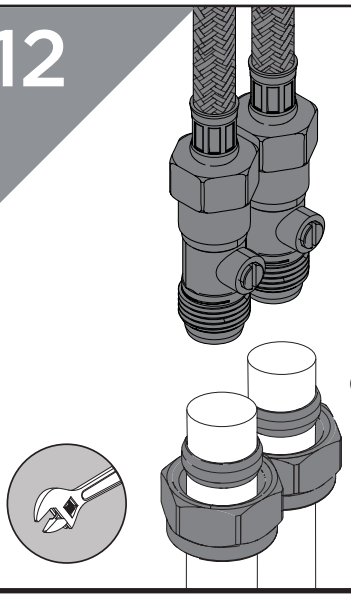

Connect the hot and cold water connections.

13

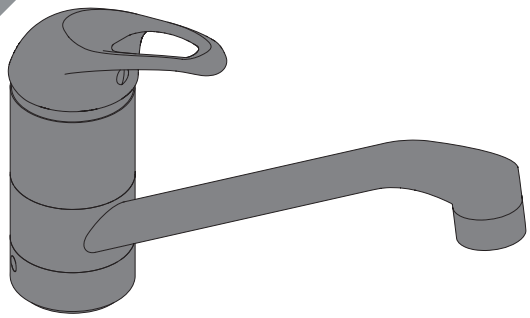

Turn on the isolation valves and check the tap and all joints/connections for any leaks. Check the tap sits flush to the surface fitted and that screws are tight. Your tap is now ready to use.

Troubleshooting

Symptom	Cause(s)	Remedy
No flow or low flow rate	Partially closed isolation valve.	Open isolation valve.
	Instantaneous water heater cycles on and off as flow rate or pressure is too low.	Increase water flow rate or pressure through system.
	Head of water is below the minimum distance required.	Refer to your the Specification for the minimum working pressure/distance required.
	Hot or cold water being drawn off elsewhere causing pressure changes or instantaneous boiler temperature changes.	Do not use other water outlets when using the taps.
	Airlock or partial blockage in the supply pipework or hoses.	Flush through pipework to ensure removal of debris and any airlocks.
	Water supply failure	Investigate water supply. Check your plumbing and heating systems for any faults.
Water dripping from taps	This is normal for a short time after using the taps.	This is caused by residual water tension, the build up of water in the tap body.
	If water continues to drip, possibly due to the ceramic disc valves/car-tridge	Refer to the Maintenance section or visit **www.youtube.com/BristanTV** to watch the procedure.
Taps do not turn on	Closed isolation valve.	Open isolation valve.
	Mains water supply turned off.	Turn on mains water supply.
Wobbly Tap	Grub screws are not tight enough at the base	Ensure the grub screws are fully tightened against the base. Screws should not be sticking out once installed.
	Check that there is no gap at the base of the tap,	If there is a gap at the base of the tap, isolate the water supply and check the installation to ensure the inlet feeds are installed correctly and the tap base is straight.
Flexing Tap on surface	Extra security may be required depending on the surface the tap is fitted on to.	Refer to the Alternative Installation steps in order to fit the Reinforcing Plate.

Troubleshooting continued

Tap won't fit flush to base	Inlet feeds are not aligned properly.	Make sure the flat edge of the plain inlet connector is in the middle of the EasyFit base, and does not overlap on the threaded inlet. **See Step 3** for more details.
	Screw holes are not lined up correctly between the tap body and EasyFit base.	**Check the Screws can't tighten up Troubleshooting Guide.**
Screws can't tighten up on body or protrude from tap body	Is the tap body fully pushed down, and flush to the base?	Make sure the holes are lined up on the tap body and base, screws are not screwed in further than the tap body and **push down with force**. If the tap body cannot go down any further after doing this, check the inlet feeds. Check using: * **8mm or less - Step 8-9** * **Greater than 8mm - Step 10-11** * **Reinforcing Plate - Step 11-12.**
	Check they are tightened correctly and tighten further if needed. Screws should be flush to the tap body or recessed in when fitted.	Check using: * **8mm or less - Step 10-11** * **Greater than 8mm - Step 12-13** * **Reinforcing Plate - Step 13-14.** If there is a gap, refer to the **Tap won't fit flush to base Troubleshooting.**

Notes

General Cleaning

Bristan products are made from premium materials, with hand polished, electroplated, PVD or EPD finishes.

Your taps should be regularly cleaned with warm water, a mild pH-neutral liquid soap and polished with a soft cloth. Any residues from soap, toothpaste etc. can cause blemishes if not rinsed off straight after use.

Household bleaches and cleaners contain harsh chemicals and may damage the surface finish. Avoid using abrasive cloths, scouring pads, scrub sponges, steel wool or anything similar.

Contact Us

BRISTAN

Part of BRISTAN GROUP

UK: Bristan Group, B78 1SG.
Customer Service: +44330 026 6273
Web: www.bristan.com
Email: enquire@bristan.com

EU: FM Mattsson AB (publ)
Box 480
SE-792 27 Mora
Sweden
Email: info@fmmattssongroup.com

Our Guarantee

At Bristan, we want to make things as easy as possible for our customers. That's why we offer solid guarantees on all our products, effective from the date of purchase, to give you peace of mind.

Your guarantee starts from the purchase of your product, but you can still benefit from registering it for easier identification in the unlikely event of a manufacturing fault, please visit **www.bristan.com/register**

For any other queries, please call Customer Service on 0330 026 6273 where our expert team of advisors will be able to offer you any help and advice.

For full guarantee terms and conditions visit **www.bristan.com/service-centre/guarantees**