BRISTAN

Installation Instructions & User Guide

Please leave these instructions with the end user

CAP3 SHXAR C (D3)

Specifications

Dynamic Water Pressure

Min: 1.0 bar **Max:** 5.0 bar

Maximum Static Pressure: 10.0 bar

Inlet Water Temperature

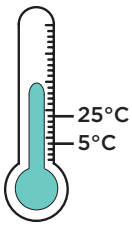

Min 5°C; Max 25°C

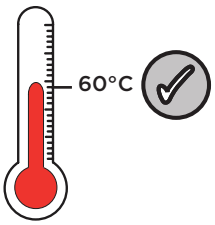

Max 60°C

IMPORTANT

The inlet hot water must be at least 10°C above the required blend temperature.

Factory pre-set 42°C

Inlet Connections

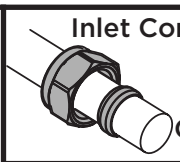

15mm Compression

Inlet Dimensions

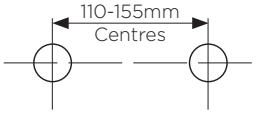

TMV2 Designation

HP-SE

Pack Contents

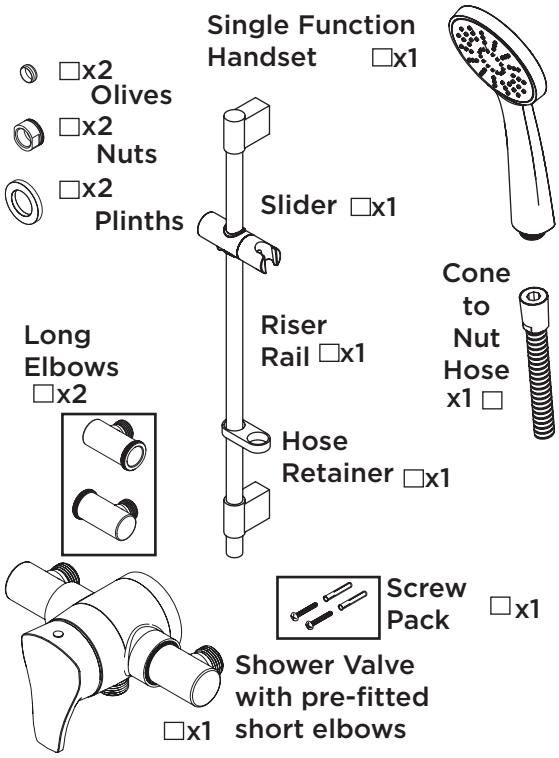

Operation

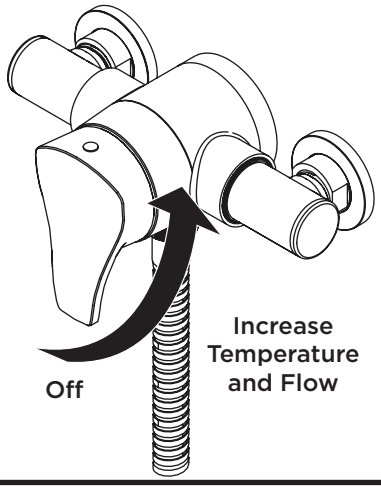

Spares

To replace any spare parts for your shower, why not scan the QR Code or visit **www.bristan.com** and search for your product.

Tools Required

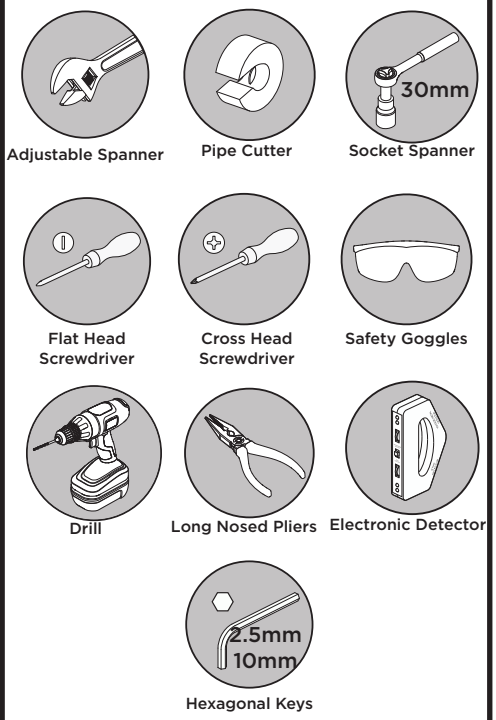

Prior to Installation

All products manufactured and supplied by Bristan are safe to use provided that they are installed, operated and receive regular maintenance in accordance with these instructions.

This product needs to be installed in accordance with, and meet the requirements of The Water Supply (Water Fittings) Regulations (Northern Ireland) 2009 and The Water Supply (Water Fittings) (Scotland) Byelaws 2014. For full Installation Requirements & Notes (IRN) please visit **www.wrasapprovals.co.uk/approvals-directory**

IRN R001 & IRN R040

Before installing this product the water supply must be thoroughly flushed in order to remove any swarf, solder etc. Full access must be made available for future maintenance/servicing purposes. Isolation valves must be fitted to the inlet water supplies to ensure ease of future maintenance.

Before drilling into walls, check that there are no hidden electrical wires, cables or water supply pipes. This can be checked with the aid of an electronic detector. If power tools are used do not forget to: - Wear eye protection - Unplug equipment after use

This product must not be modified in any way as this will invalidate the guarantee.

BRISTAN

Installation Instructions and User Guide

Exposed Sequential and Concentric Mini Valve Showers

Please keep this booklet for future reference.

Installer, when you have read these instructions please ensure you leave them with the user.

Contents

Thank you for choosing Bristan, the UK's leading taps and showers expert. We have designed this product with your enjoyment in mind. To ensure that it works to its full potential, it needs to be fitted correctly. These fitting instructions have been created to give you all of the information you need and, if you need any further help, please do not hesitate to give us a call on 0330 026 6273.

Contents

- Important Safety Information **3**
- Installation Requirements **4-7**
- Prior to Installation **8-9**
- Installation **10**
- General Cleaning **11**
- Maintenance **12-16**
- Troubleshooting **17**
- Notes **18-19**

Important Safety Information

Please make sure you read these instructions and retain for future use.
All products manufactured by Bristan are safe, providing they are installed and used correctly and also receive maintenance when needed.

These fittings, including the connecting water and waste system need to be installed in accordance with and meet the requirements of the Water Supply Regulations 1999 (Water Fittings) and current by-laws. If you are in doubt about your ability to install this product correctly or safely, you should employ the services of an experienced qualified plumber.

This product must not be modified in any way otherwise this will invalidate the guarantee. Remove all packaging and check the contents for damage before starting installation.

Warning: Before installing the new mixer valve it is essential that you thoroughly flush through the pipework in order to remove any remaining swarf, solder, etc. Failure to carry out this procedure could cause problems or damage to the workings of the mixer valve.

Fitting isolating valves to the inlet feeds is required for ease of maintenance.

Warning: Do not operate the mixer if you suspect it is frozen. Do not site the mixer valve where it might be subjected to freezing conditions.

Consider the following whilst using power tools:

- Prior to drilling into walls, check there are no hidden electrical cables or wires and there are also no water pipes. These can potentially be found using an electrical or metal detector. You may also need to know some of the schematics of previous installations to determine the suitability and accommodation of the installation.
- Wear the correct PPE, especially ear, eye and hand protection when using power tools. Unplug any mains equipment after use.
- Keep electrical equipment away from sources of water.
- If a blow-lamp is used when plumbing, the flame must be kept well away from the product otherwise damage may occur.

If in doubt, contact a registered plumber, your Local Water Authority or the Secretary of The Institute of Plumbing, address as follows;-

The Institute of Plumbing,
64 Station Lane,
Hornchurch,
Essex, RM12 6NB
Tel:01708 472791

Installation Requirements

Please refer to your specific shower contents page for specification information.

These showers are designed to be used in conjunction with the kit supplied, or Bristan shower kits where not supplied. We cannot guarantee compatability or adequate performance when used with other kits. This would also invalidate your guarantee. Please refer to the installation manual supplied with your Bristan shower kits for their specification information.

This shower valve must be installed in compliance with current water regulations. If you have any doubts about the water regulation requirements contact your local water services provider or use the services of a professional plumber.

This shower valve is suitable for use with the following water supply systems:

- **Gravity Fed Hot and Cold** (pressure imbalance should not exceed a ratio of 5:1 - see Specification section)
- **Gravity Fed Hot and Mains Cold** (pressure imbalance should not exceed a ratio of 5:1 - see Specification section)
- **Instantaneous water heater** (combination boiler)
- **Unvented System**
- **Pumped System**

Important: If you install this shower valve with a gravity fed system, there must be a minimum head (vertical distance) from the underside of the cold water storage tank to the outlet of at least 1 metre .

Note: Pumped system (with Essex flange) If you install this shower valve to a pumped gravity fed system where the minimum head (vertical distance) from the underside of the cold water storage tank to the top of the hot water cylinder is less than 1 metre we recommend an Essex flange is used as shown.

Flushing Pipe-work

Important: Before connecting the shower valve, the supply pipe-work must be flushed to clear debris before connecting the shower. Debris will reduce the performance and life of the mixer.

Installation Requirements

Gravity Fed Hot and Cold

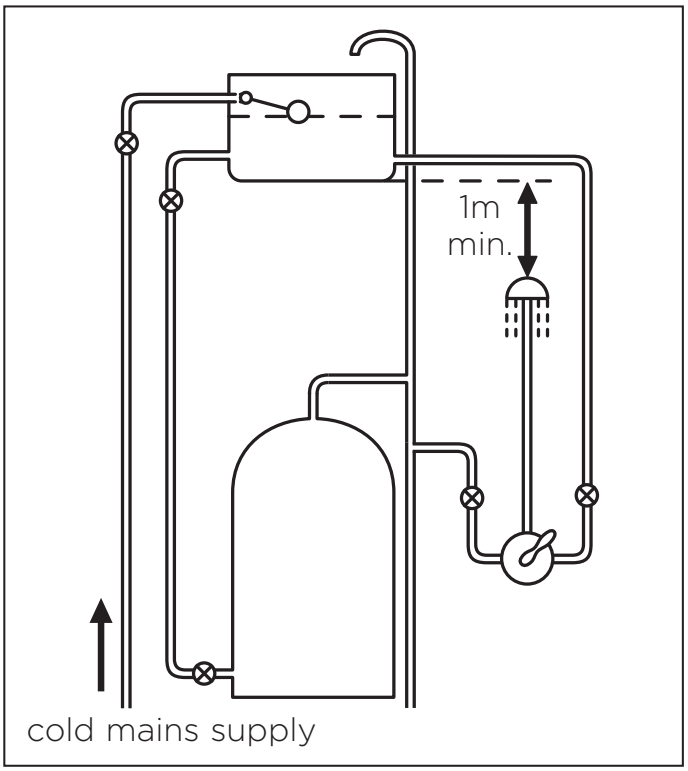

Gravity Fed Hot and Mains Cold

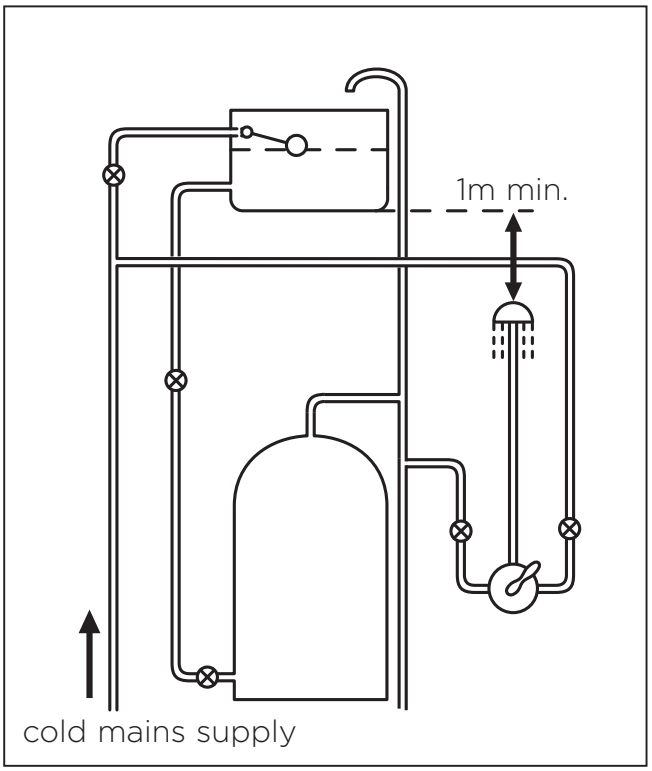

Key: ⊗ Isolating Valve | Reducing Valve | Shower Valve | Pump | Essex Flange

Installation Requirements

Instantaneous Water Heater

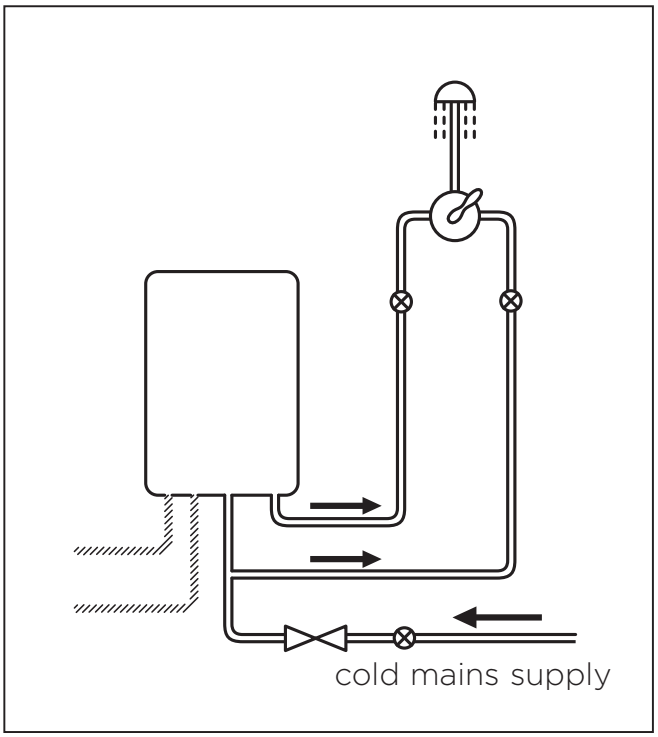

Unvented System

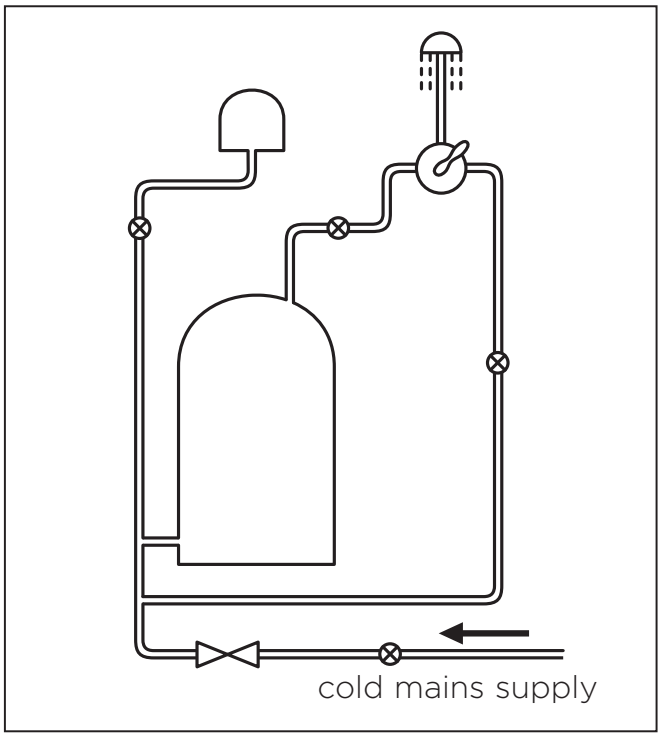

Pumped System

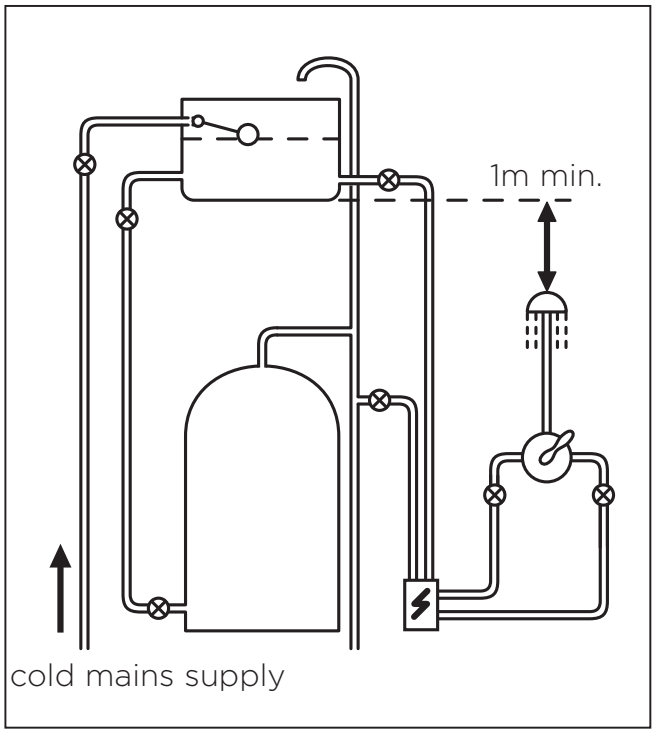

Pumped System (with Essex flange)

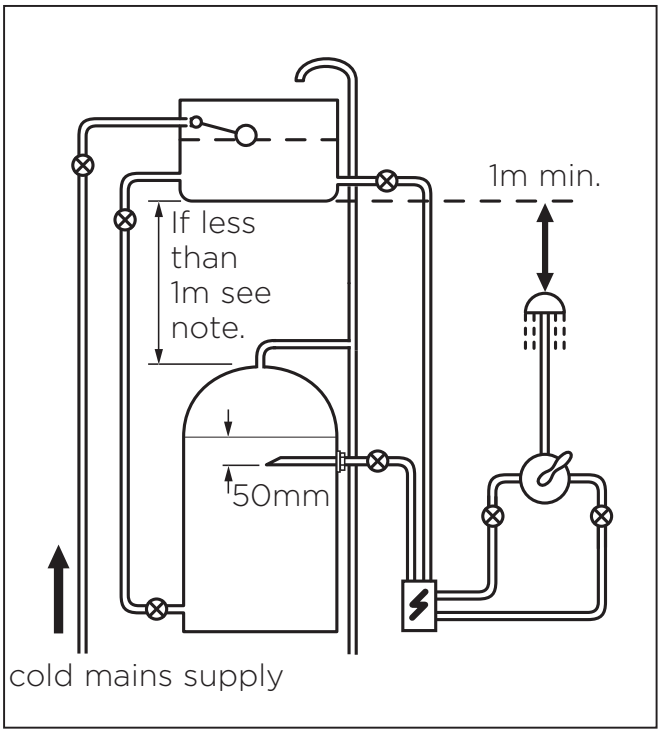

Key: ⊗ **Isolating Valve** | **Reducing Valve** | **Shower Valve** | **Pump** | **Essex Flange**

Installation Requirements

This fitting needs to be installed in accordance with the following Installation Requirements and Notes (IRN) to ensure they meet the requirements of the Water Supply (Water Fittings) Regulations 1999 and the Scottish Byelaws 2004.

IRN R001: See text of entry for Installation Requirements or Notes.

IRN R040 - Schedule 2-15 (1): The fitting shall be installed so that its outlet discharges above the spill-over level of any fixed appliance as indicated below:-

For backflow protection in domestic or installations up to, and including, Fluid Category 3.

If the fitting cannot be installed as indicated in the table opposite it shall be installed as either a or b below:

a: with an approved double check valve assembly or some other no less effective backflow prevention device immediately upstream of the inlet.

b: so that it draws water by gravity only from a cistern, or cylinder having a permanently open vent pipe, and the distributing pipe supplies no other fittings (other than a draining tap) at a lower level.

For backflow protection in premises or installations up to, and including Fluid Category 5.

The vertical distance of the outlet above the spill-over level shall be not less than 20mm or twice the diameter of the inlet pipe to the fitting, which ever is the greater. If the fitting cannot be installed as indicated it shall be installed with a backflow prevention arrangement suitable for the Fluid Category.

Size of tap or combination fitting	**Vertical distance of outlet above spill-over level**
1. Not exceeding ½”	20mm
2. Exceeding ½” but not exceeding ¾”	25mm
3. Exceeding ¾”	70mm

Prior to Installation

Flow regulators have been pre-fitted to this product for water efficiency.

If you have low water pressure, or certain water supply systems these may need to be removed in order to achieve adequate flow. Please see the table to check whether the flow regulators need to be removed.

Supply System		Flow Regulator		Comments
Hot Supply	**Cold Supply**	**Hot Supply**	**Cold Supply**	
0.1 - 1.0 bar	**0.1 - 1.0 bar**	Not Required	Not Required	Maximum pressure loss ratio 5:1 between inlets
1.0 - 5.0 bar or pumped	**1.0 - 5.0 bar or pumped**	Yellow (5 litre)	Green (7 litre)	Optional, can be used if water economy is required
Gravity Fed 0.1 - 0.5 bar	**Mains 1.0 - 10 bar**	Not Required	Green (7 litre)	
Gravity Fed over 0.5 bar		Yellow (5 litre)	Green (7 litre)	
Unvented Mains/ Mains Pressurised		Yellow (5 litre)	Green (7 litre)	
Instantaneous Water Gas Heater		Yellow (5 litre)	Green (7 litre)	It may not be necessary on some gas water heaters to have a flow regulator on the hot water supply.
Instantaneous Water Electric Heater		Not Required	Yellow (5 litre)	It is a requirement that a stable flow of water passes through the heater. This can be achieved by fitting a flow stabiliser before the heater. The heater temperature should also be adjusted to 45-50°C
Any vented (open outlet) Heater Gas/Electric e.g. Electric Shower		**Do not use mixer valves with this type of water system; this would be extremely dangerous!**		

Prior to Installation

To Remove/Replace Flow Regulators:

1. Unscrew both inlet elbows anti-clockwise from the valve body.

2. Remove the flow regulators using long-nosed pliers if required.

3. Screw the inlet elbows clockwise to fit back into the valve body.

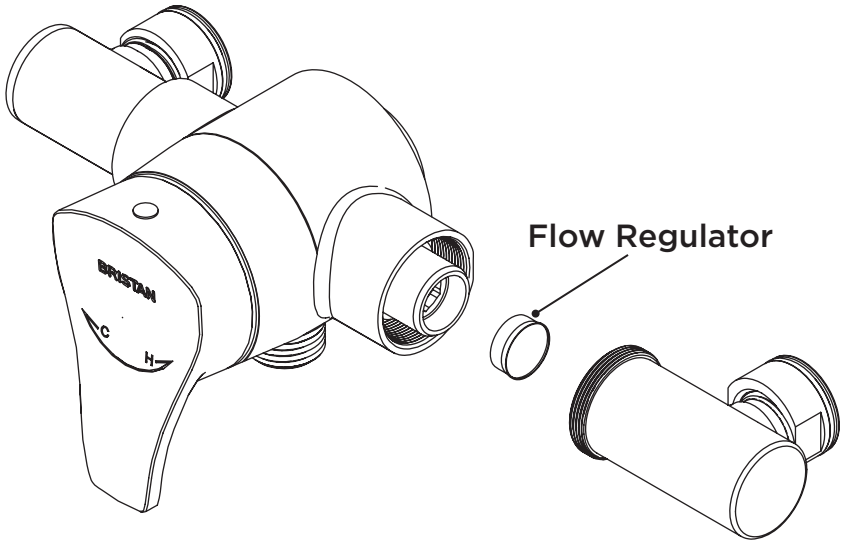

Configuring the Inlet Elbows:

The shower valve is supplied with two small and two large elbows that can adjust between 110-155mm.

The elbows can be pointed to feed from the top, bottom or rear.

Two full turns are required to fit the elbow into the body properly.

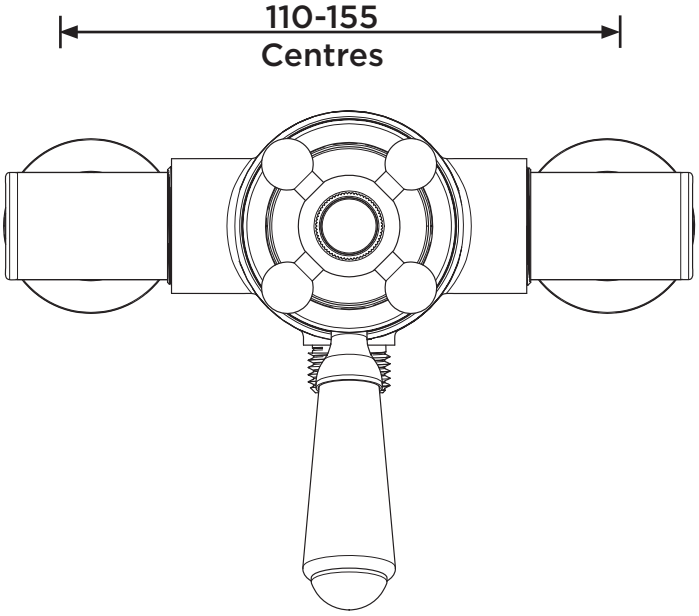

To Adjust Elbows:

1. Unscrew both inlet elbows anti-clockwise from the valve body.

2. Choose the elbow configuration to suit inlet centres:

   * 2x small elbows: 110-130mm
   * 1x small, 1x large: 130-136mm
   * 2x large: 136-155mm

3. Screw in the desired elbows clockwise for two complete turns to fit. This will set to largest possible centre measurement.

4. The elbows can be screwed a maximum of 1.5 turns after fitting for adjustment. Screw further clockwise to reduce the centre measurement; anti-clockwise to increase.

Installation

1. Check your shower's specification page and check the pack contents for completeness.

2. Prepare the 15mm water pipework, leaving sufficient pipe protruding from the finished wall to fit into the elbows.

   Flush through the pipework to ensure removal of any debris. Turn off the mains water supply and close any isolating valves.

   Important: Water supplies to the mixer must be with hot on the left and cold on the right when viewed from the front.

REMEMBER
Fit isolation valves to pipe-work for future maintenance.

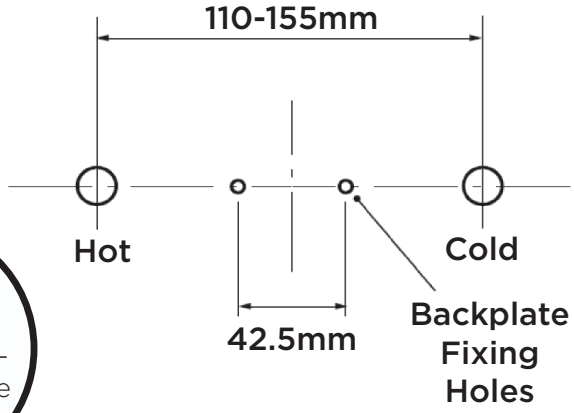

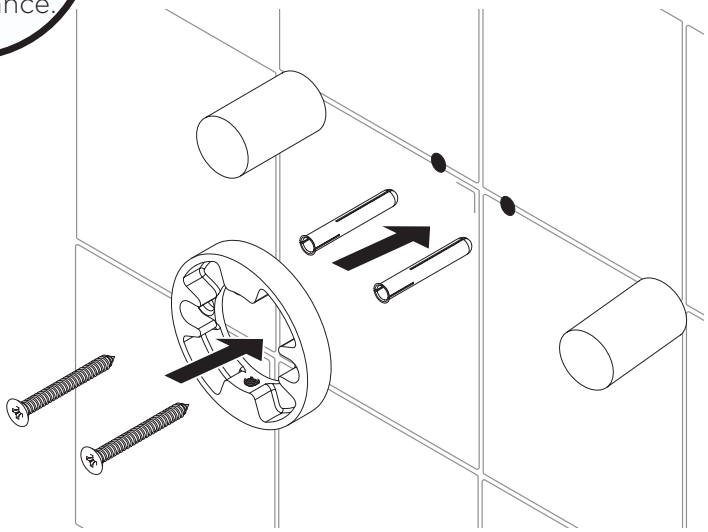

3. Measure the centre distance. Measure the half-way point between the centres and mark on the wall.

4. Configure the inlet elbows to meet the centre distance.

5. Undo the grub screws at the back of the shower valve to remove the backplate. Place the backplate on the marked half-way point between the centres and mark the fixing holes

6. Drill the fixing holes using a suitable drill bit. A pilot drill will be required if drilling into tiles. Insert the wall plugs and screw the backplate to the wall.

   Warning: Please check for any hidden pipes and cables before drilling holes into the wall

7. Fit the nuts and then olives on to the water supply pipes. Once fitted, feed the plinths and shower valve on to the water supply pipes and tighten into position. Secure the valve to the back plate using the grub screw.

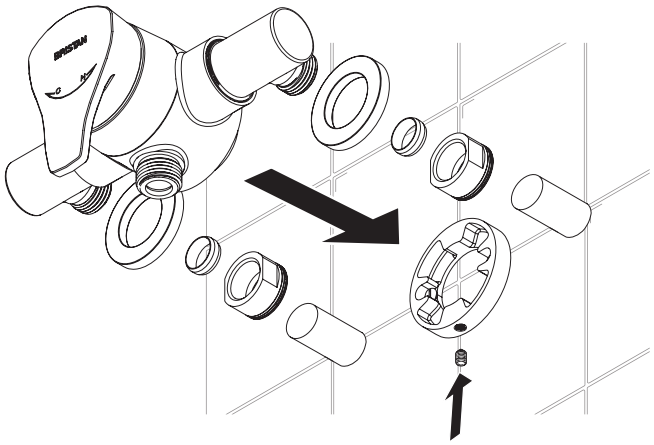

Please refer to your specific shower kit instructions, or shower contents sheet if a kit is supplied to install the shower kit.
If your shower needs to follow the TMV scheme, please refer to the TMV Manual to commission your shower.

General Cleaning

Bristan products are made from premium materials, with hand polished, PVD, EPD or electroplated finishes.

Your product should be regularly cleaned with warm water, a mild pH-neutral liquid soap, and polished with a soft cloth. Any residues from soap, toothpaste, shampoos and shower gels can cause blemishes if not rinsed off straight after use.

Household bleaches and cleaners contain harsh chemicals and may damage the surface finish. Avoid using abrasive cloths, scouring pads, scrub sponges, steel wool or anything similar.

Some surfaces such as nickel and pewter may be affected by the dye found in some cloths, so it is also important to avoid hanging cloths on surfaces.

Spare Parts

Visit **www.bristan.com** or scan the QR Code and search for your product code to find all the spares available for your shower.

Maintenance

Replace/Clean Cartridge: Sequential Shower Valves:

1

Undo the grub screw to remove the handle. This can be located at the top or underneath the handle.

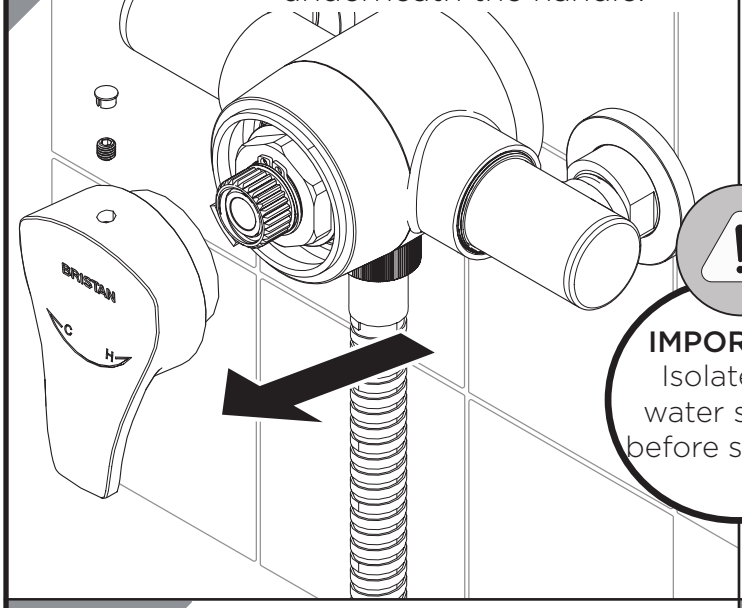

IMPORTANT
Isolate the water supply before starting!

2

Use a 30mm socket spanner to unscrew the cartridge from the valve body. Carefully remove the cartridge and spring.

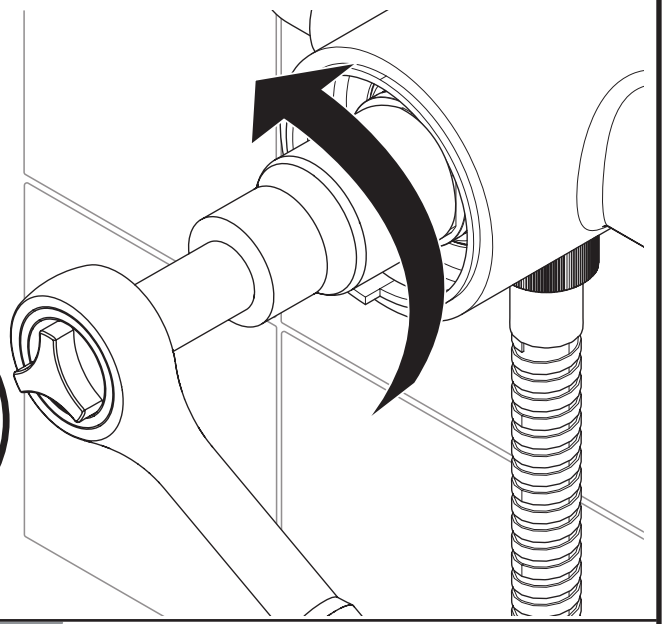

3

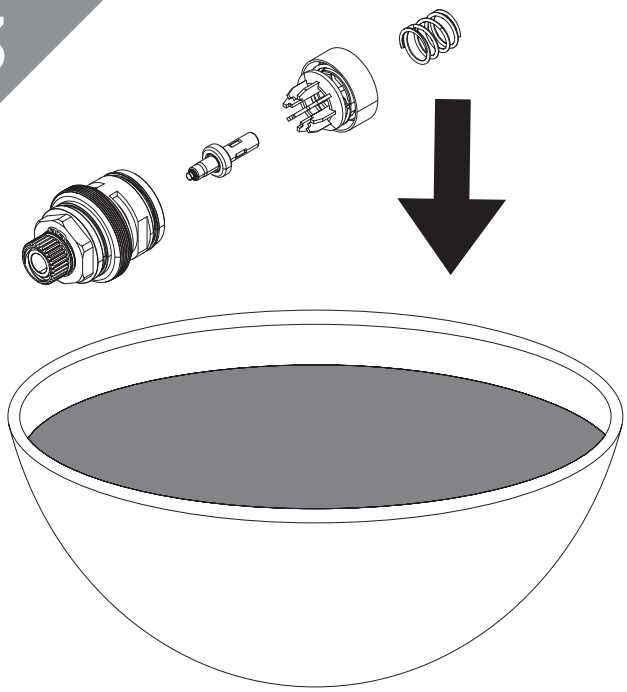

Remove all seals and check for any damage. Place the cartridge in a suitable solution and soak until fully de-scaled. Rinse thoroughly. Replace all seals and grease with a WRAS approved sealant.

4

Reverse the steps to re-fit the cartridge and handle. Reset the maximum temperature.

 Need help? Give us a call on 0330 026 6273 and speak to one of our trained advisors.

Maintenance

Replace/Clean Cartridge:
Concentric Shower Valves:

1

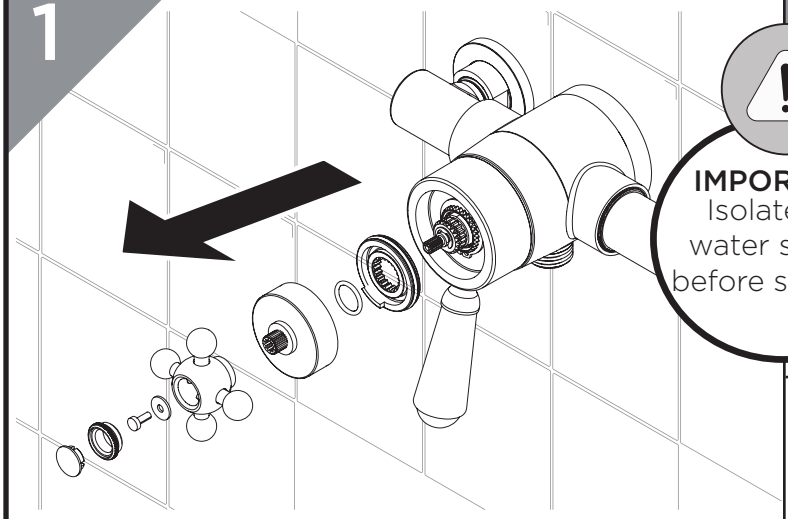

IMPORTANT
Isolate the water supply before starting!

Undo the indice housing and unscrew the screw to remove the temperature handle. Pull off the shroud and remove the temperature stop.

2

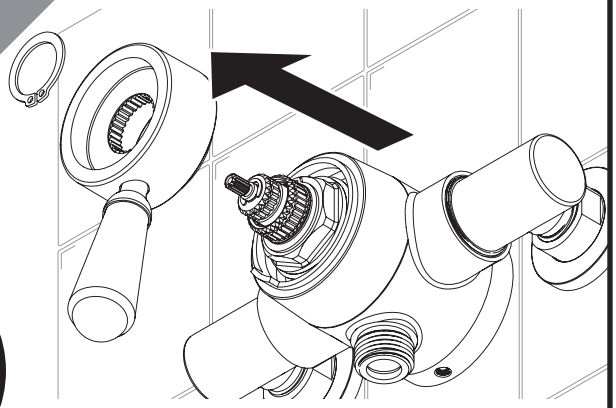

Remove the circlip and pull the flow handle off of the valve

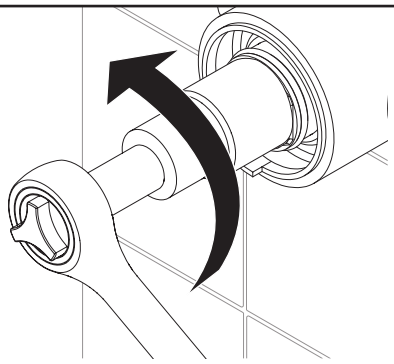

Use a 30mm socket spanner to unscrew the cartridge from the valve body. Carefully remove the cartridge and spring.

3

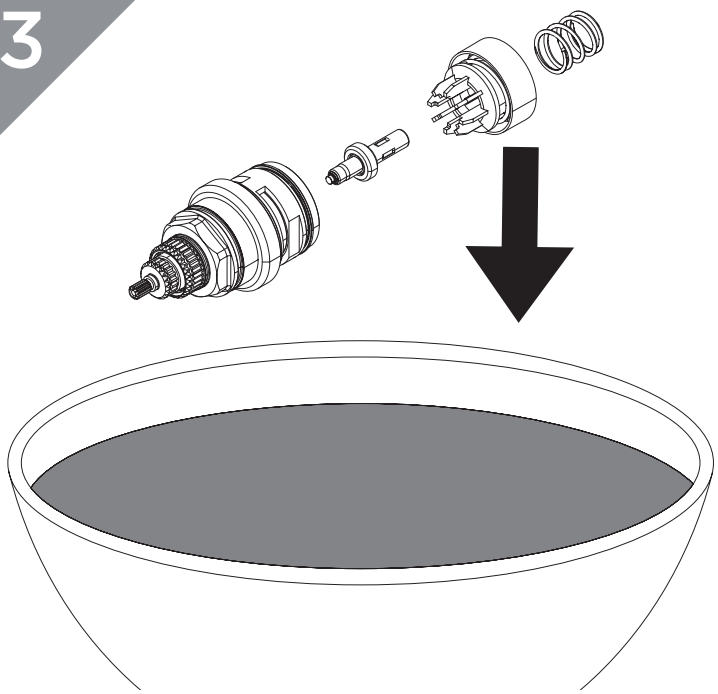

Remove all seals and check for any damage. Place the cartridge in a suitable solution and soak until fully de-scaled. Rinse thoroughly. Replace all seals and grease with a WRAS approved sealant.

4

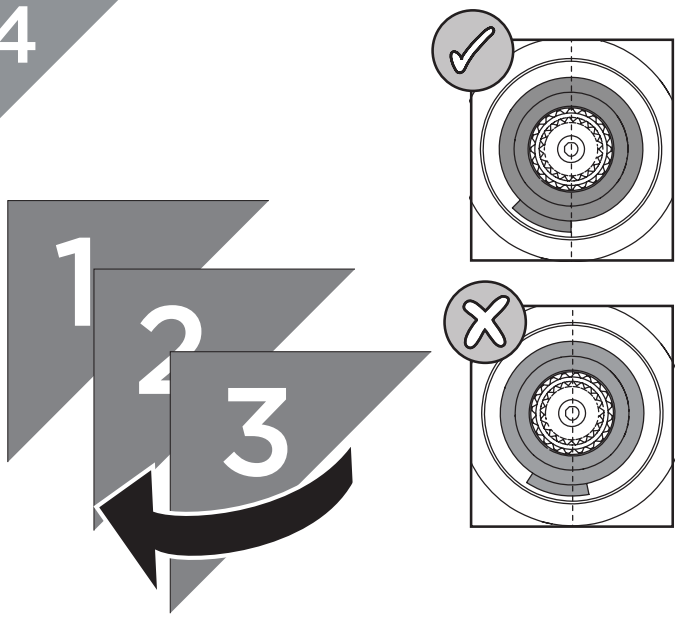

Reverse the steps to re-fit the cartridge and handle. Ensure the temperature stop is fitted correctly. The stop should sit at the bottom left, aligned centrally to the cartridge. Reset the maximum temperature.

Maintenance

Maximum Temperature Setting: Sequential Shower Valves:

The shower has been pre-set to 42°C as per TMV standards. This is based on being fitted with nominally balanced pressures with the hot water inlet supply at 65°C. If your operating conditions are different to the above your maximum outlet temperature may differ.

Please note if the maximum temperature is increased the shower will no longer comply with the TMV scheme. If this isn't an issue, we recommend setting the maximum outlet temperature no higher than 43°C.

1

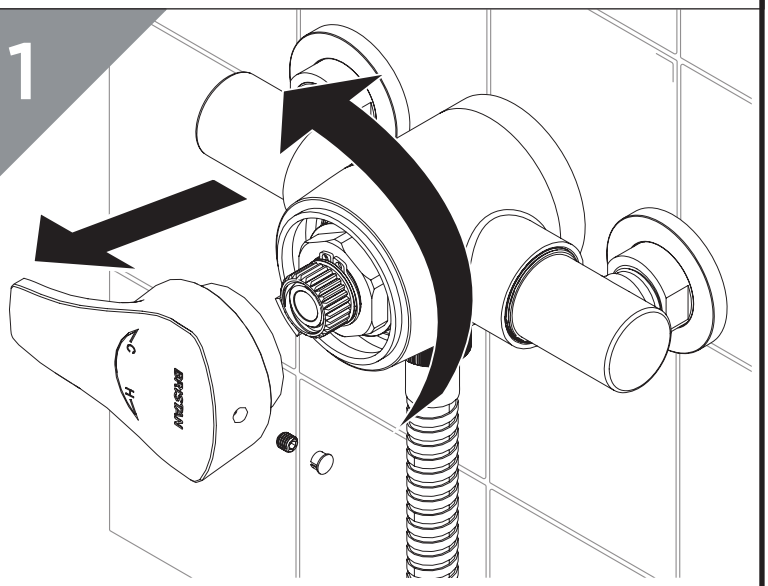

Turn the temperature handle to the maximum temperature. Undo the grub screw to remove the handle.

2

Using the 2.5mm hex key supplied, adjust the temperature:

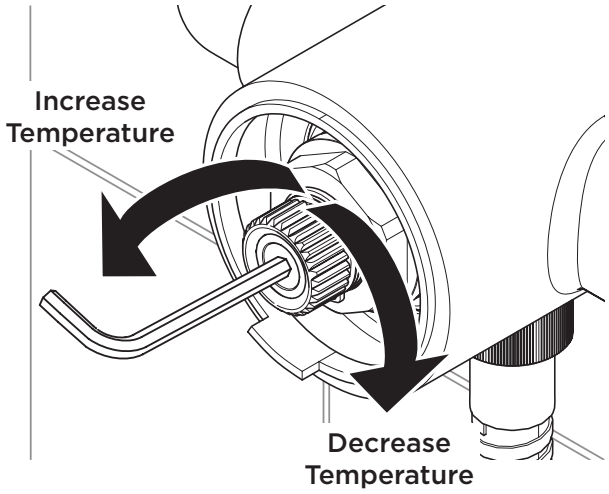

Wait for a couple of minutes for the temperature to stabilise after adjusting. Measure the water outlet temperature using a thermometer. Adjust until the desired temperature is reached.

3

Re-fit the temperature handle back in the maximum temperature position.

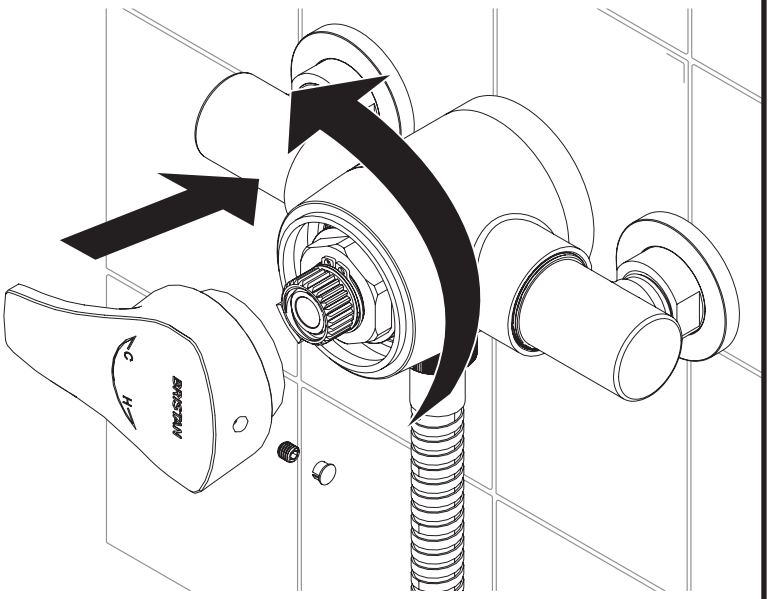

Maintenance

Maximum Temperature Setting: Concentric Shower Valves:

The shower has been pre-set to 42°C as per TMV standards. This is based on being fitted with nominally balanced pressures with the hot water inlet supply at 65°C. If your operating conditions are different to the above your maximum outlet temperature may differ.

Please note if the maximum temperature is increased the shower will no longer comply with the TMV scheme. If this isn't an issue, we recommend setting the maximum outlet temperature no higher than 43°C.

1

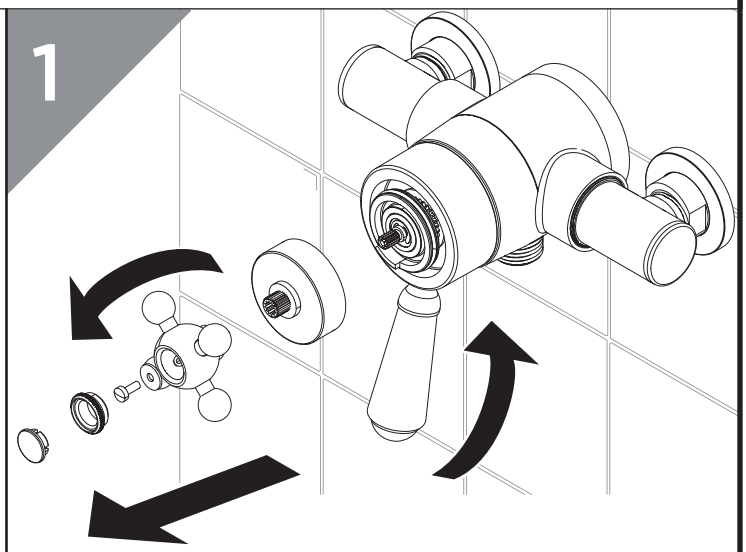

Turn the temperature handle to the maximum temperature. Remove the temperature handle and unscrew the shroud. Turn on the shower.

2

Adjust the maximum temperature by turning the spindle:

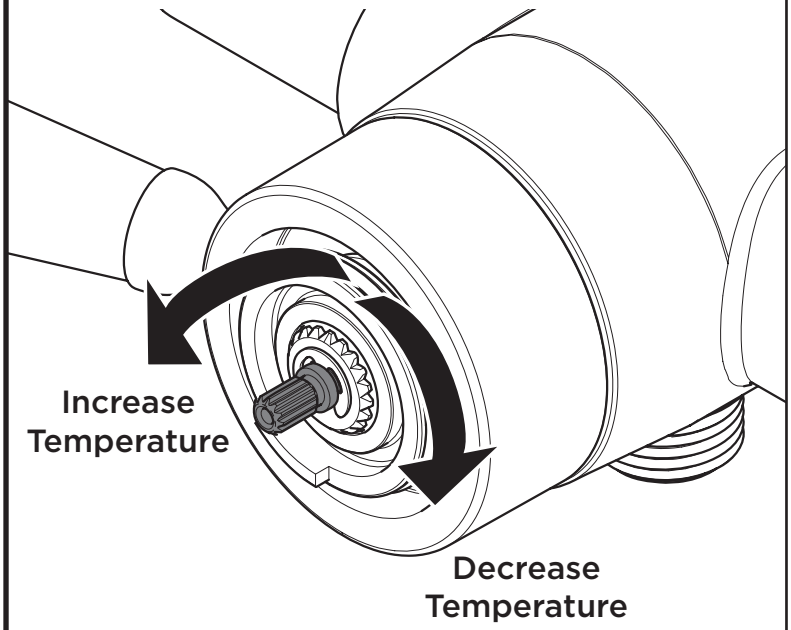

Wait for a couple of minutes for the temperature to stabilise after adjusting. Measure the water outlet temperature using a thermometer. Adjust until the desired temperature is reached.

3

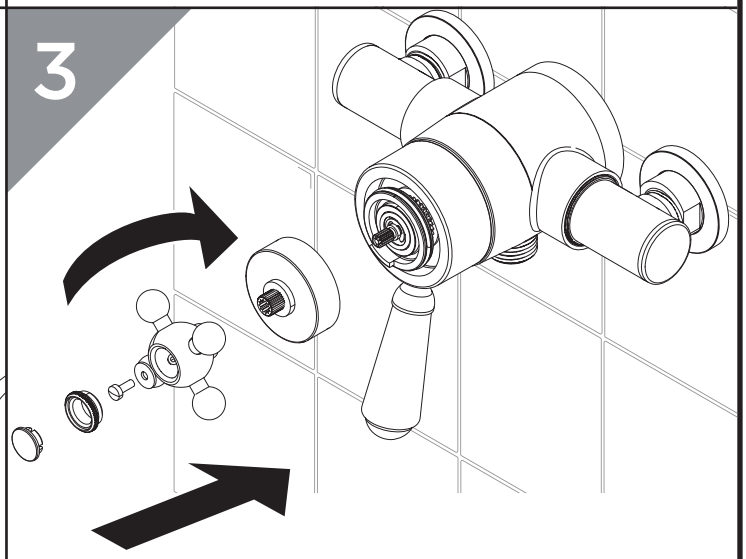

Re-fit the temperature handle back in the maximum temperature position.

Maintenance

Servicing the Elbows:

1

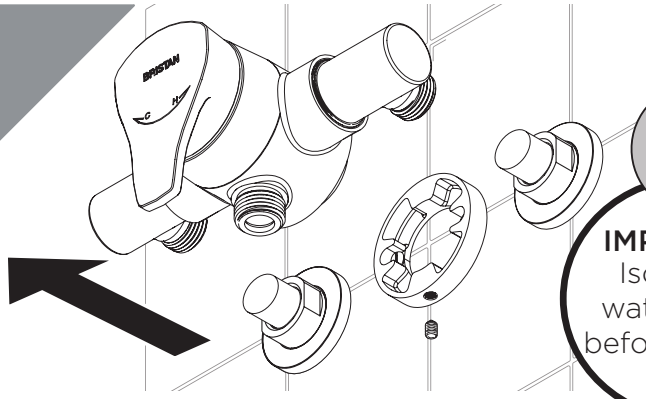

IMPORTANT
Isolate the water supply before starting!

Disconnect your shower kit. Undo the compression nuts and grub screw at the bottom of the shower valve to remove from the wall.

2

Remove the filters from both elbows and set aside. Unscrew the elbows completely from the shower valve.

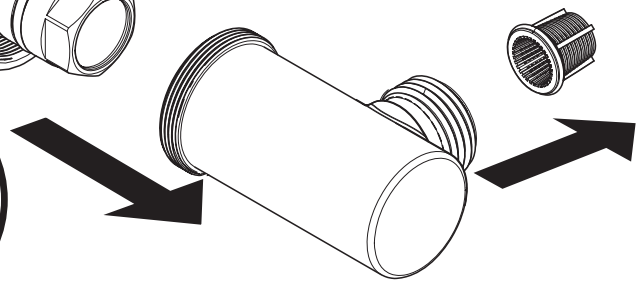

3

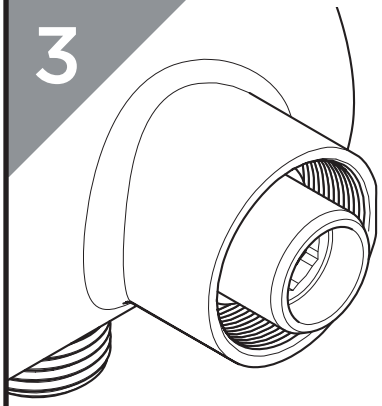

If installed, use a pair of long-nosed pliers to remove any flow regulators fitted. Set aside.

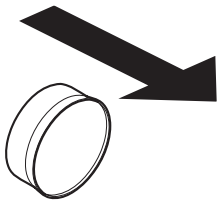

4

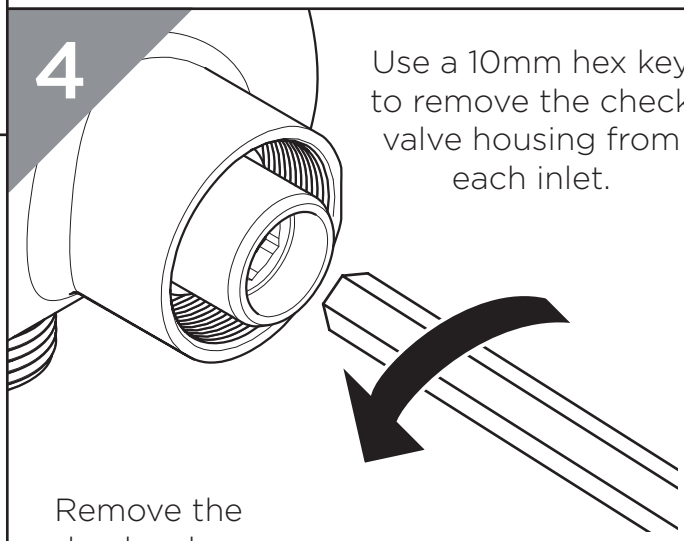

Use a 10mm hex key to remove the check valve housing from each inlet.

Remove the check valves from the back of each housing.

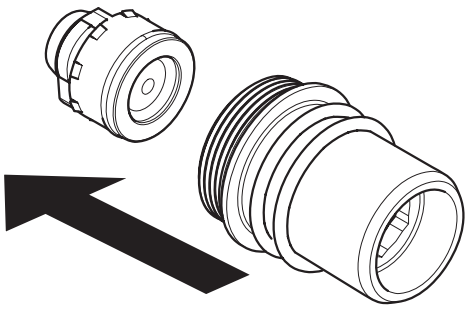

5

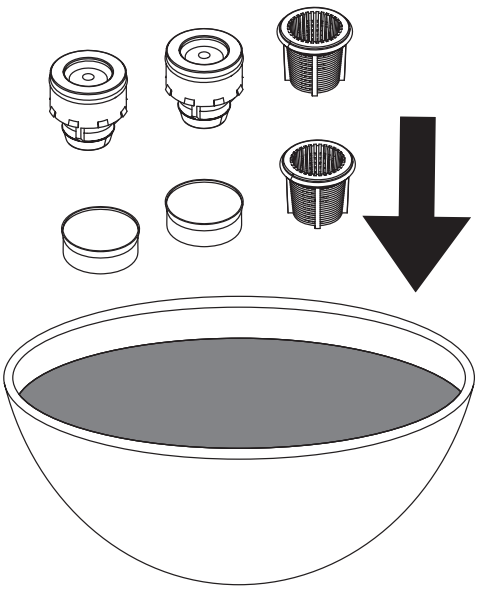

Check all components for damage and replace if necessary. Rinse thoroughly in clean water to remove any debris.

6

Reverse steps 1-4 to re-fit the elbows and secure the shower to the wall. Test all joints and connections for any leaks.

 Need help? Give us a call on 0330 026 6273 and speak to one of our trained advisors.

Troubleshooting

Symptom	Cause	Remedy
No flow or low flow rate	Partially closed isolation valve.	Open isolation valve.
	Instantaneous water heater cycles on and off as flow rate or pressure is too low.	Increase water flow rate or pressure through system.
	Head of water is below the minimum distance required.	Refer to the specification for the minimum distance required.
	Are the water supply pressures balanced?	If pressures are unbalanced, a pressure reducing valve should be used for optimum performance.
	Hot or cold water being drawn off elsewhere causing pressure changes or instantaneous boiler temperature changes.	Do not use other water outlets when using the shower.
	Airlock or partial blockage in the supply pipework.	Flush through pipework and filters to ensure removal of debris and any airlocks.
	Hot/Cold water supply has failed	Check the hot and cold feeds. The shower will not work if either fails.
Outlet Water Temperature too Hot/Cold	Maximum Water Temperature needs adjusting.	Refer to the Temperature Setting section to set your desired maximum temperature.
	Filter/pipe blockage	Flush through pipework and filters to ensure removal of debris and any airlocks.
	Installation conditions outside operating parameters.	Refer to the specification for the minimum distance required.
	Hot water temperature is less than 10°C above the required blend temperature	Adjust hot water temperature or wait for water to reheat if a stored water system is used.
	Instantaneous water not igniting because the water flow rate is too low.	Increase water flow rate through the system. Refer to the Maintenance section to clean/check the cartridge and filters for any damage. Contact your boiler manufacturer.
	Instantaneous water not igniting because the water pressure is too low.	Refer to the specification for system requirements. Increase water pressure through the system. Contact your boiler manufacturer.
Only hot/cold water from Shower Valve	Inlet water supplies are reversed.	Check the water inlet connections are the correct way around: Hot on the left, Cold on the right when viewed from the front. Rework pipework as necessary.
	Filter/pipe blockage	Flush through pipework and filters to ensure removal of debris and any airlocks.
Water dripping from shower	This is normal for a short time after using the shower.	This is caused by residual water tension, the build up of water in the shower.
	If water continues to drip, possibly due to the cartridge	Remove cartridge and clean, refer to 'Maintenance' section before starting any maintenance.
Shower does not turn on	Closed isolation valve.	Open isolation valve.
	Mains water supply turned off.	Turn on mains water supply.

Notes

Notes

Issue: D7
Part Number: FI MiniVlv

BRISTAN

UK: Bristan Group, B78 1SG.
Customer Service: +44330 026 6273
Web: www.bristan.com
Email: enquire@bristan.com

EU: FM Mattsson AB (publ)
Box 480
SE-792 27 Mora
Sweden
Email: info@fmmattssongroup.com

At Bristan, we want to make things as easy as possible for our customers. That's why we offer solid guarantees on all our products, effective from the date of purchase, to give you peace of mind.

To start your free guarantee simply scan the QR code and register your product.
Alternatively visit **www.bristan.com/register**.

For any other queries, please call our Customer Service on **0330 026 6273** where our expert team of advisors will be able to offer you any help and advice.

For full guarantee terms and conditions visit **www.bristan.com/service-centre/guarantees**.