BRISTAN

Installation Instructions & User Guide

Please leave these instructions with the end user

BUZ SHXDIVCTFF Range (D4)

Specifications

Dynamic Water Pressure

Min: 1.0 bar **Max:** 5.0 bar

Maximum Static Pressure: 10.0 bar

Inlet Water Temperature

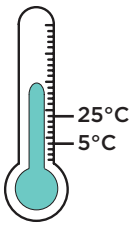

Min 5°C; Max 25°C

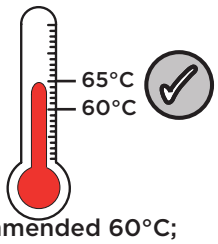

Recommended 60°C; Max 65°C

IMPORTANT

The inlet hot water must be at least 10°C above the required blend temperature.

Factory pre-set 38°C

Inlet Connections

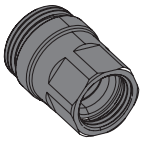

1/2" Compression

Inlet Dimensions

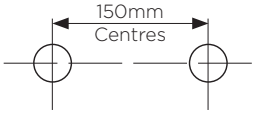

Tools Required

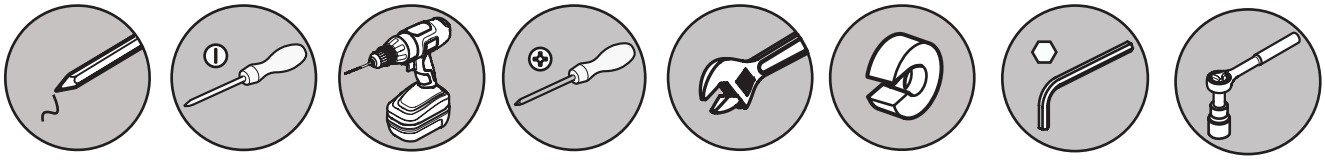

Pencil | Flat head Screwdriver | Drill | Cross head Screwdriver | Spanner | Pipe Cutter | Hexagonal Keys | Socket Spanner

Pack Contents

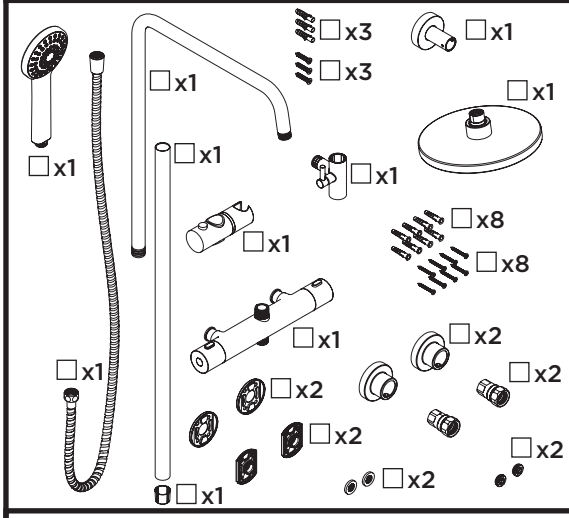

Operation

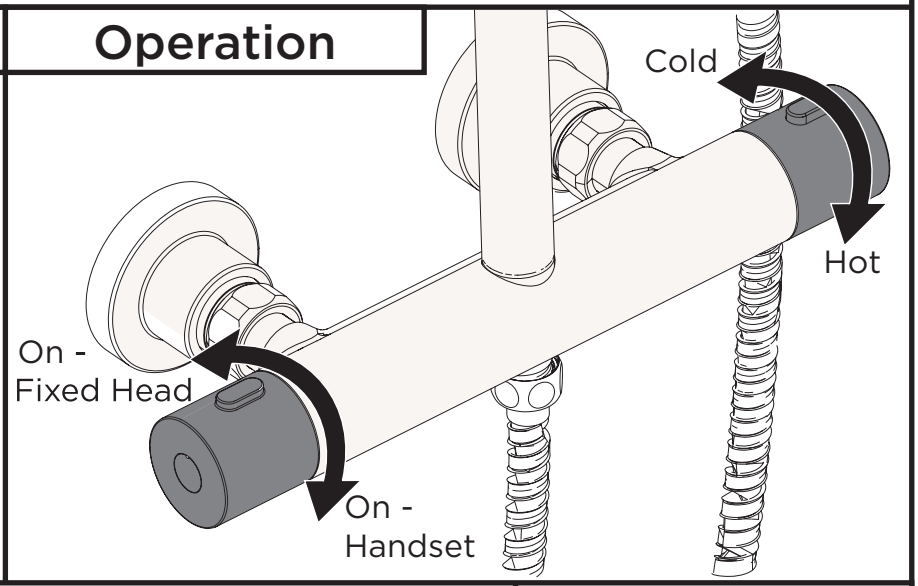

Prior to Installation

All products manufactured and supplied by Bristan are safe to use provided that they are installed, operated and receive regular maintenance in accordance with these instructions.
This product needs to be installed in accordance with, and meet the requirements of The Water Supply (Water Fittings) Regulations (Northern Ireland) 2009 and The Water Supply (Water Fittings) (Scotland) Byelaws 2014. For full Installation Requirements & Notes (IRN) please visit **www.wrasapprovals.co.uk/approvals-directory**
Before installing this product the water supply must be thoroughly flushed in order to remove any swarf, solder etc. Full access must bemade available for future maintenance/servicing purposes. Isolation valves must be fitted to the inlet water supplies to ensure ease of future maintenance.
Before drilling into walls, check that there are no hidden electrical wires, cables or water supply pipes. This can be checked with the aid of an electronic detector. If power tools are used do not forget to:
- Wear eye protection - Unplug equipment after use

This product must not be modified in any way as this will invalidate the guarantee.

Spares

To replace any spare parts for your shower, why not scan the QR Code or visit **www.bristan.com** and search for your product.

Installation - Height Adjustment

1

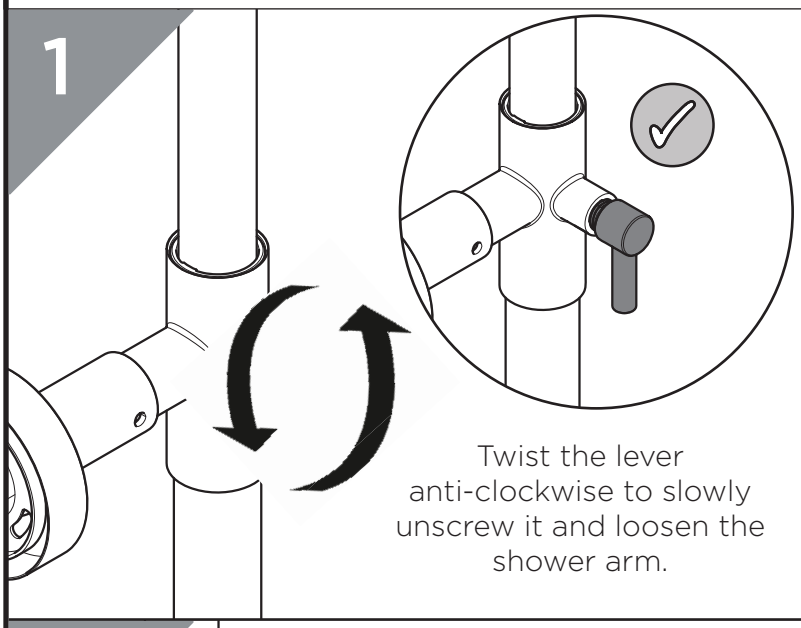

Twist the lever anti-clockwise to slowly unscrew it and loosen the shower arm.

2

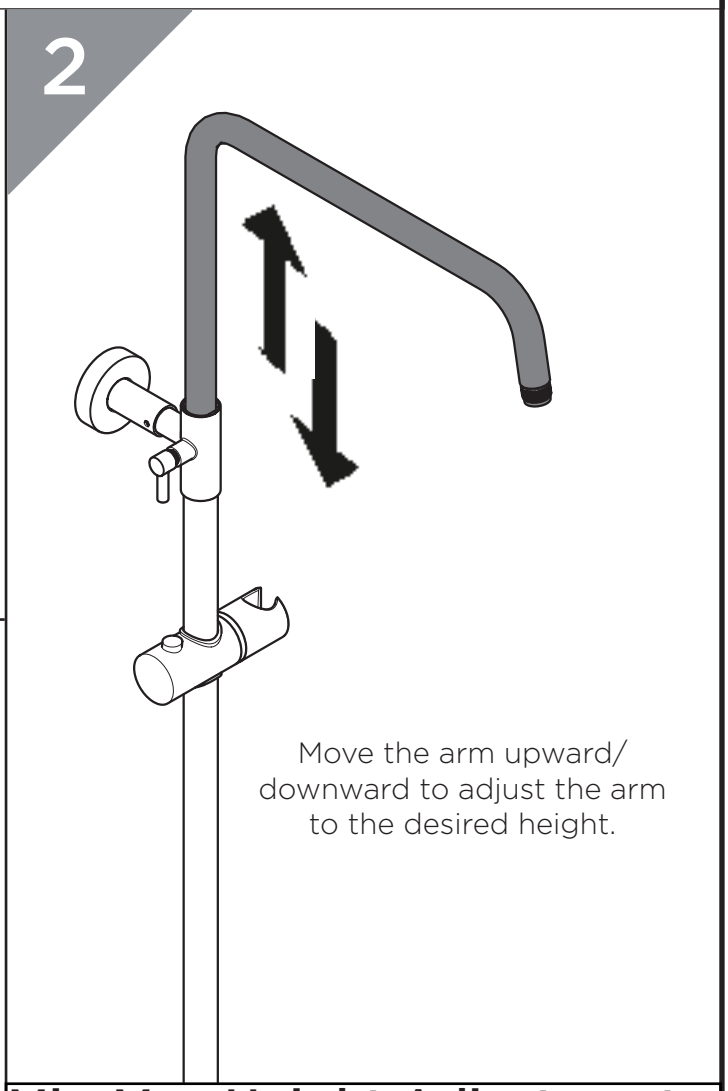

Move the arm upward/ downward to adjust the arm to the desired height.

3

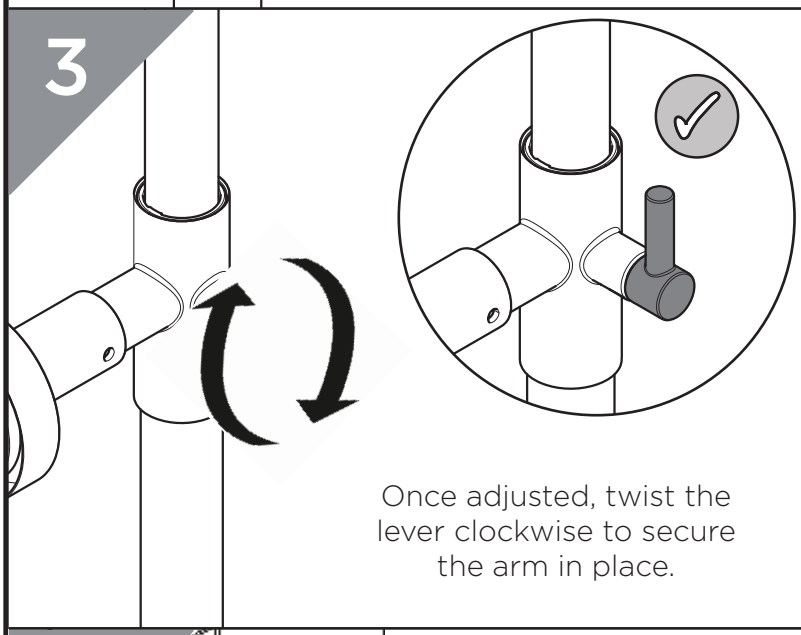

Once adjusted, twist the lever clockwise to secure the arm in place.

4

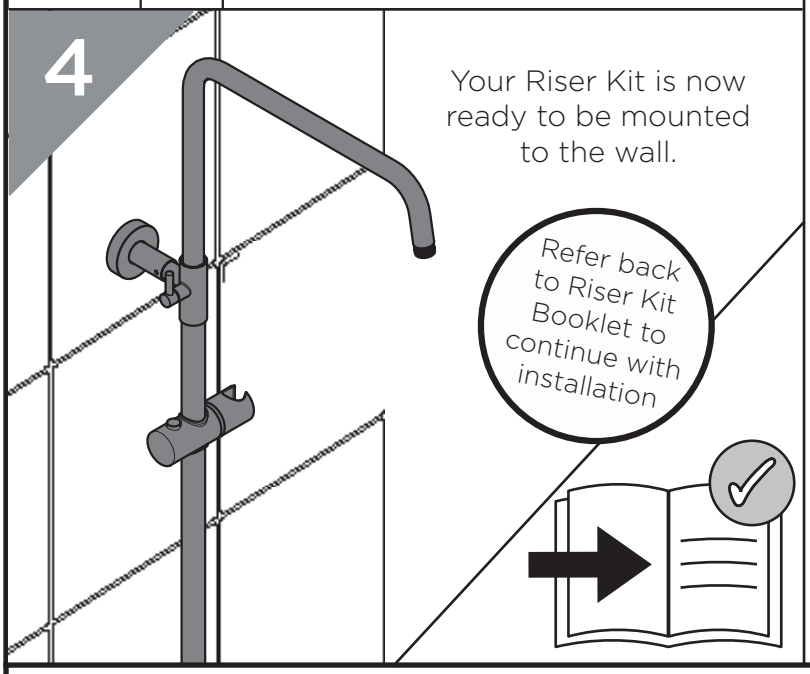

Your Riser Kit is now ready to be mounted to the wall.

Min-Max Height Adjustment

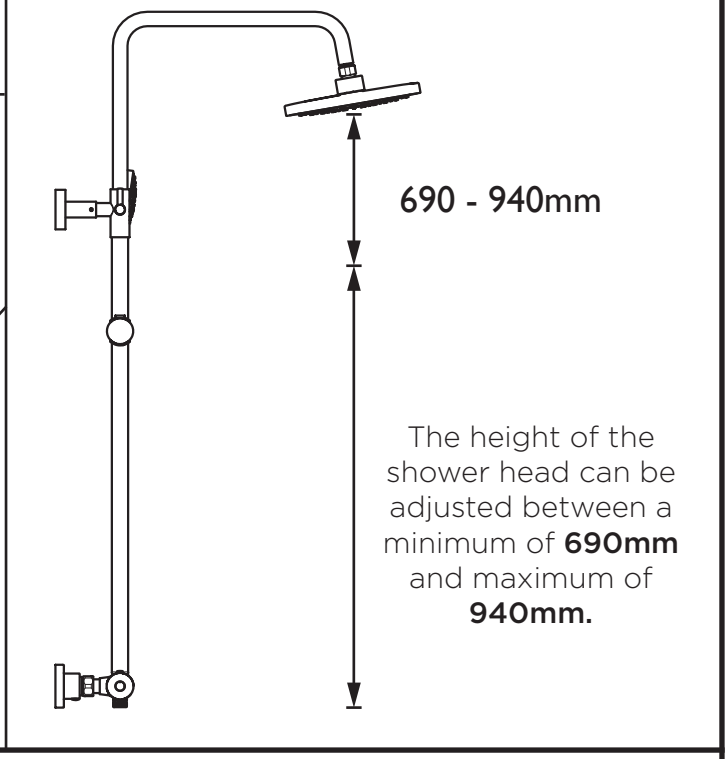

The height of the shower head can be adjusted between a minimum of **690mm** and maximum of **940mm.**

Need help? Give us a call on 0330 026 6273 and speak to one of our trained advisors.

BRISTAN

Installation Instructions and User Guide

Bar Showers with Wallmount 12 Fixing Kit (WMNT12)

Please keep this booklet for future reference.

Installer, when you have read these instructions please ensure you leave them with the user.

Contents

Thank you for choosing Bristan, the UK's leading taps and showers expert. We have designed this product with your enjoyment in mind. To ensure that it works to its full potential, it needs to be fitted correctly. These fitting instructions have been created to give you all of the information you need and, if you need any further help, please do not hesitate to give us a call on 0330 026 6273.

Contents

- Important Safety Information 3
- Installation Requirements 4-6
- Installation 7
- Isolation 8
- Temperature Setting 8
- General Cleaning 9
- Notes 9
- Maintenance - Cartridege/Valve Cleaning 10
- Troubleshooting 11

Important Safety Information

Please make sure you read these instructions and retain for future use.
All products manufactured by Bristan are safe, providing they are installed and used correctly and also receive maintenance when needed.

These fittings, including the connecting water and waste system need to be installed in accordance with and meet the requirements of the Water Supply Regulations 1999 (Water Fittings) and current by-laws. If you are in doubt about your ability to install this product correctly or safely, you should employ the services of an experienced qualified plumber.

This product must not be modified in any way otherwise this will invalidate the guarantee. Remove all packaging and check the contents for damage before starting installation.

Warning: Before installing the new mixer valve it is essential that you thoroughly flush through the pipework in order to remove any remaining swarf, solder, etc. Failure to carry out this procedure could cause problems or damage to the workings of the mixer tap.

Fitting isolating valves to the inlet feeds is required for ease of maintenance.

Warning: Do not operate the mixer if you suspect it is frozen. Do not site the mixer valve where it might be subjected to freezing conditions.

Consider the following whilst using power tools:

- Prior to drilling into walls, check there are no hidden electrical cables or wires and there are also no water pipes. These can potentially be found using an electrical or metal detector. You may also need to know some of the schematics of previous installations to determine the suitability and accommodation of the installation.
- Wear the correct PPE, especially ear, eye and hand protection when using power tools. Unplug any mains equipment after use.
- Keep electrical equipment away from sources of water.
- If a blow-lamp is used when plumbing, the flame must be kept well away from the product otherwise damage may occur.

If in doubt, contact a registered plumber, your Local Water Authority or the Secretary of The Institute of Plumbing, address as follows;-

The Institute of Plumbing,
64 Station Lane,
Hornchurch,
Essex, RM12 6NB
Tel:01708 472791

Installation Requirements

Please refer to your specific shower contents page for specification information.

These showers are designed to be used in conjunction with the kit supplied, or Bristan shower kits where not supplied. We cannot guarantee compatability or adequate performance when used with other kits. This would also invalidate your guarantee. Please refer to the installation manual supplied with your Bristan shower kits for their specification information.

This shower valve must be installed in compliance with current water regulations. If you have any doubts about the water regulation requirements contact your local water services provider or use the services of a professional plumber.

This shower valve is suitable for use with the following water supply systems:

- **Gravity Fed Hot and Cold** (pressure imbalance should not exceed a ratio of 5:1 - see Specification section)
- **Gravity Fed Hot and Mains Cold** (pressure imbalance should not exceed a ratio of 5:1 - see Specification section)
- **Instantaneous water heater** (combination boiler)
- **Unvented System**
- **Pumped System**

⚠ **Important:** If you install this shower valve with a gravity fed system, there must be a minimum head (vertical distance) from the underside of the cold water storage tank to the outlet of at least 1 metre for every 0.1 bar of minimum pressure required.

⚠ **Note:** Pumped system (with Essex flange) If you install this shower valve to a pumped gravity fed system where the minimum head (vertical distance) from the underside of the cold water storage tank to the top of the hot water cylinder is less than 1 metre we recommend an Essex flange is used as shown.

Flushing Pipe-work

Important: Before connecting the shower valve (see 'Installation' on page 7), the supply pipe-work must be flushed to clear debris before connecting the shower. Debris will reduce the performance and life of the bar shower and Wall Mount.

Installation Requirements

Gravity Fed Hot and Cold

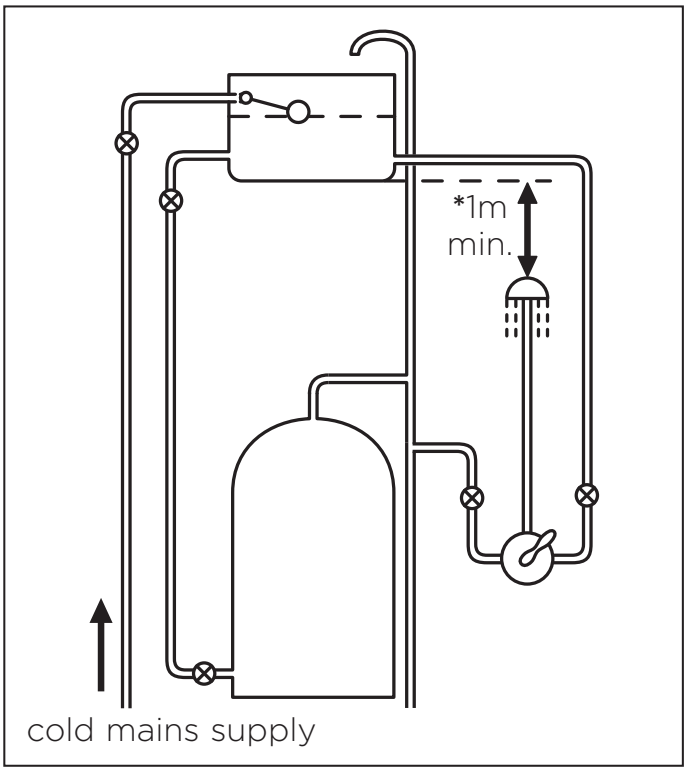

Gravity Fed Hot and Mains Cold

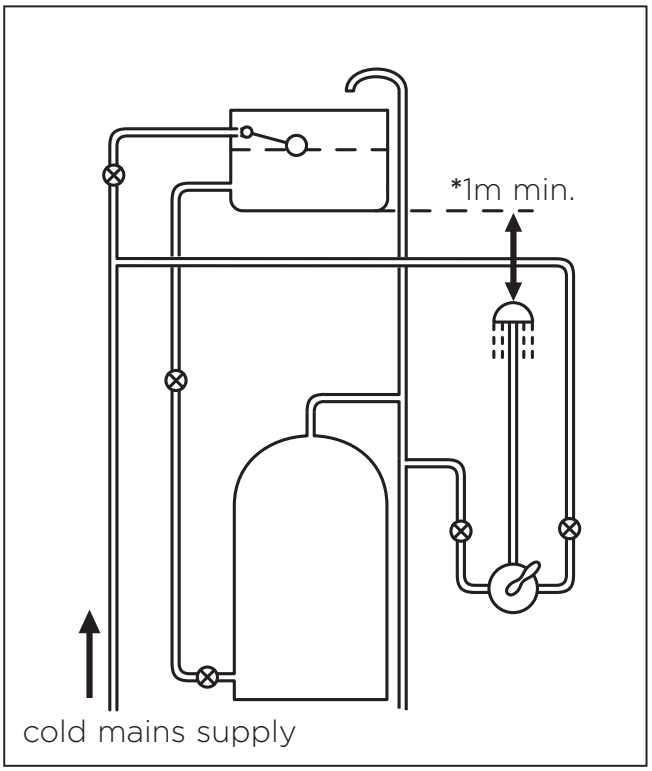

Key: ⊗ **Isolating Valve** | **Reducing Valve** | **Shower Valve** | **Pump** | **Essex Flange**

***NOTE** - Depending on the min. pressure of your shower, you will need to leave 1m per min. bar pressure between the underside of the cold water storage tank and the outlet. E.g Min Bar Pressure = 0.2 Distance = 2m.

Please refer to your contents page for your showers min. bar pressure

Installation Requirements

Instantaneous Water Heater

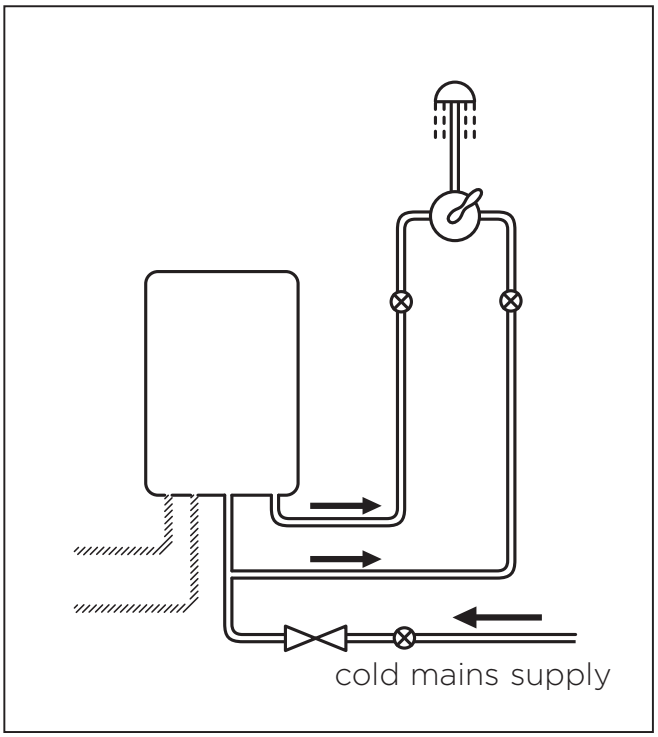

Unvented System

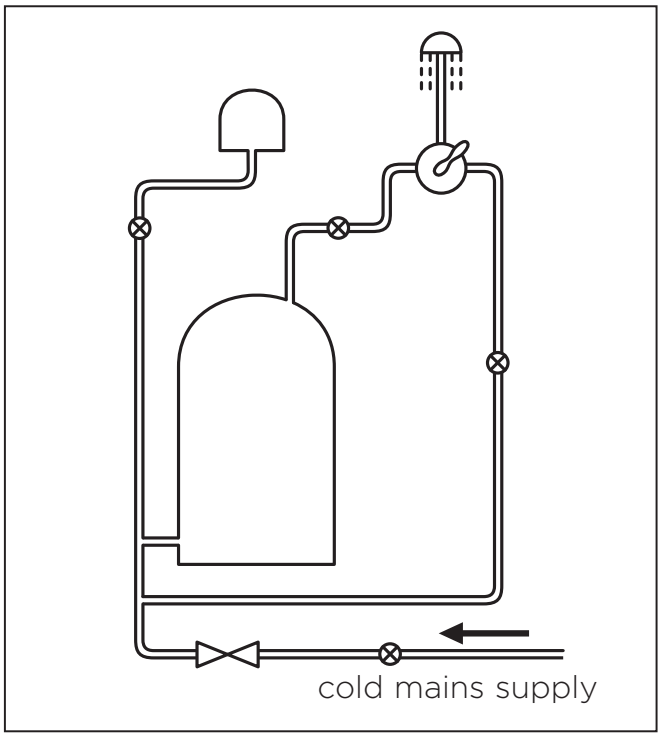

Pumped System

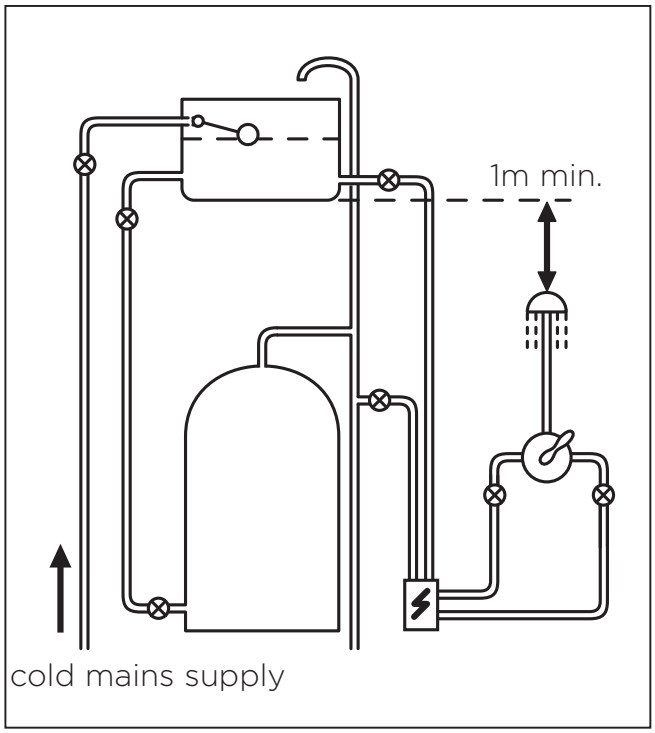

Pumped System (with Essex flange)

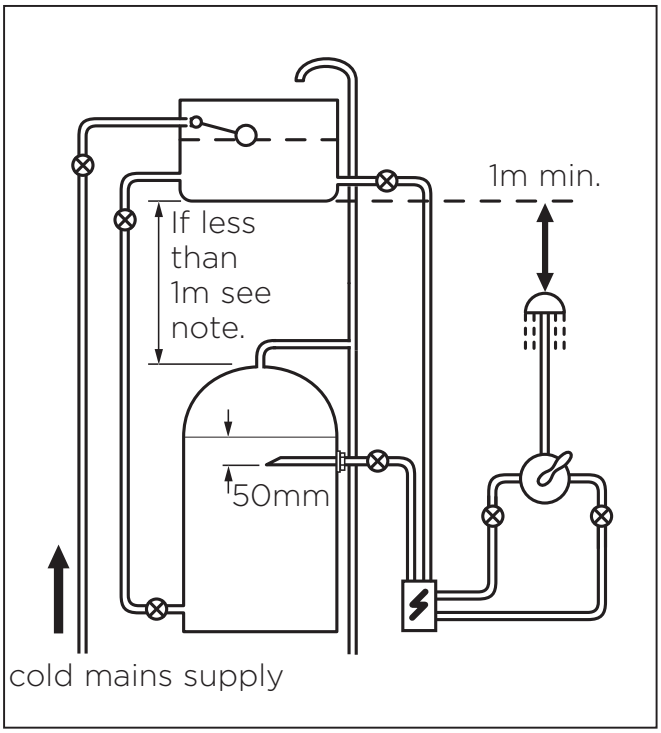

Key: ⊗ **Isolating Valve** | **Reducing Valve** | **Shower Valve** | **Pump** | **Essex Flange**

Installation

PLEASE NOTE - Wall Mounts shown in these instructions are for illustration purposes only. WMNT12 and WMNT12 SQ can be fitted using these instructions.

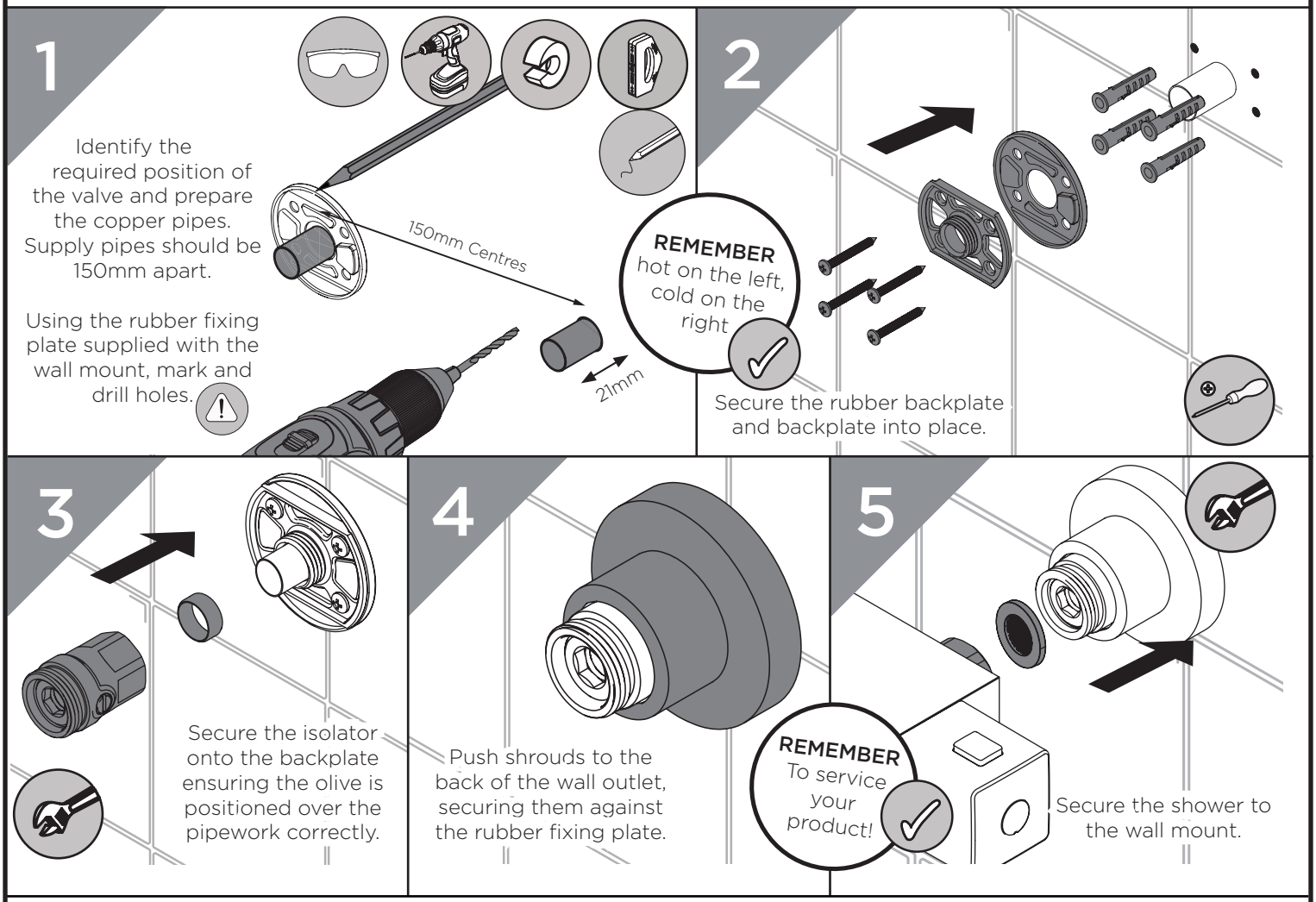

Now refer to your kit instructions to install your shower kit if supplied. If your shower is TMV approved, please refer to the TMV manual supplied to commision your shower.

Isolation

1

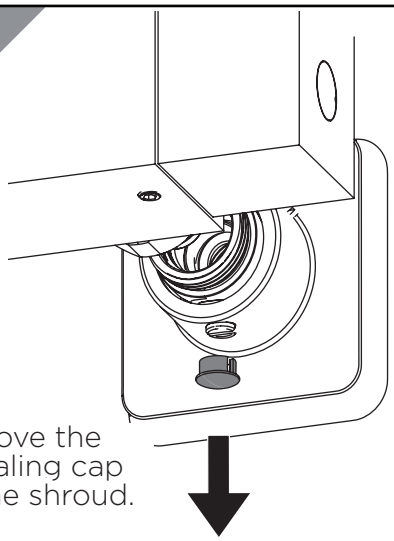

Remove the concealing cap from the shroud.

2

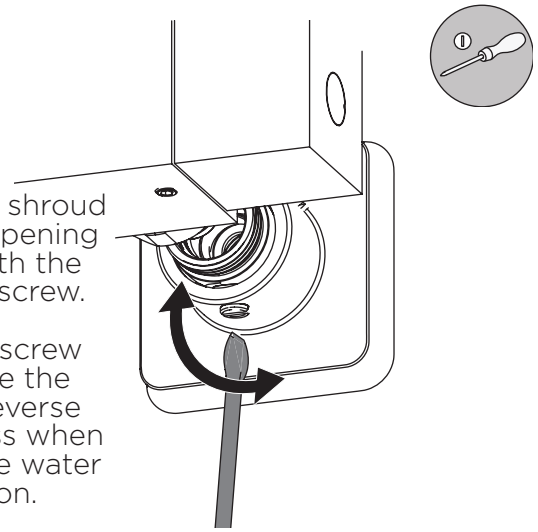

Rotate the shroud until the opening aligns with the isolation screw.

Turn the screw to isolate the water. Reverse the process when turning the water back on.

PLEASE NOTE - Wall Mounts shown in these instructions are for illustration purposes only. WMNT12 and WMNT12 SQ can be fitted following these instructions. Check your contents page for more details specific to your shower.

Temperature Setting

1

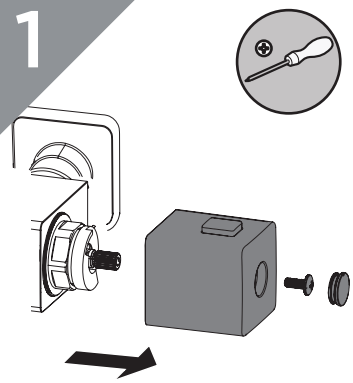

Turn the temperature handle to the max. setting and remove the temperature handle.

2

Turn flow handle to 'on' position, letting the temperature stabilise.

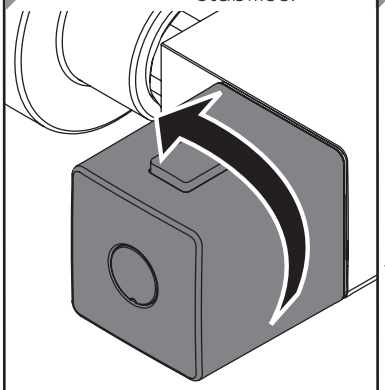

3

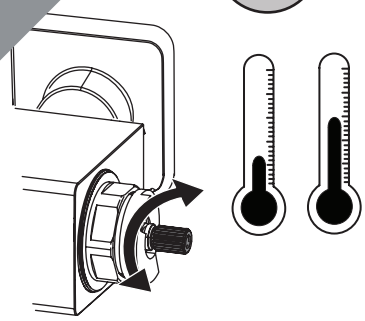

Turn cartridge spindle clockwise to decrease the temperature.

Turn cartridge spindle anti-clockwise to increase the temperature.

4

Reverse steps 1-2 to reinstall the cartridge and handle.

PLEASE NOTE - Bar showers shown in these instructions are for illustration purposes only. All bar showers can be fitted/maintained following these instructions. Check your contents page for more details specific to your shower.

Maintenance/ Valve Cleaning

PLEASE NOTE - Bar showers shown in these instructions are for illustration purposes only. All bar showers can be fitted/maintained following these instructions.

1

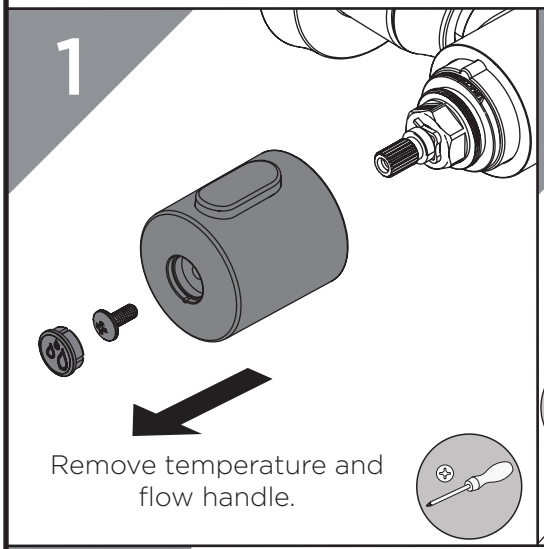

Remove temperature and flow handle.

2

Remove the cartridge retaining nut and diverter cartridge.

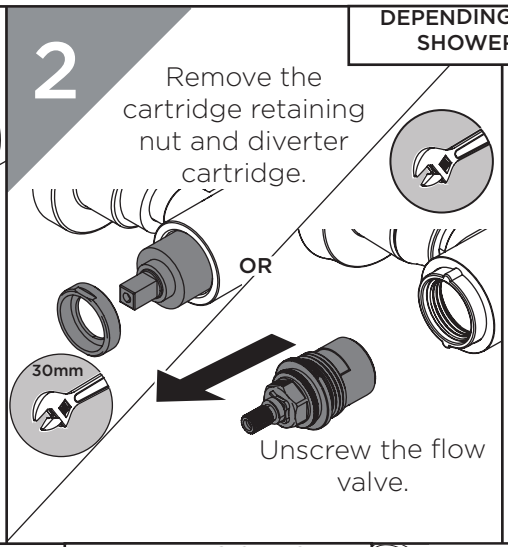

OR

Unscrew the flow valve.

DEPENDING ON YOUR SHOWER TYPE:

Some showers will require specific tools for removing the retaining nut.

Refer to your contents sheet for the required tool.

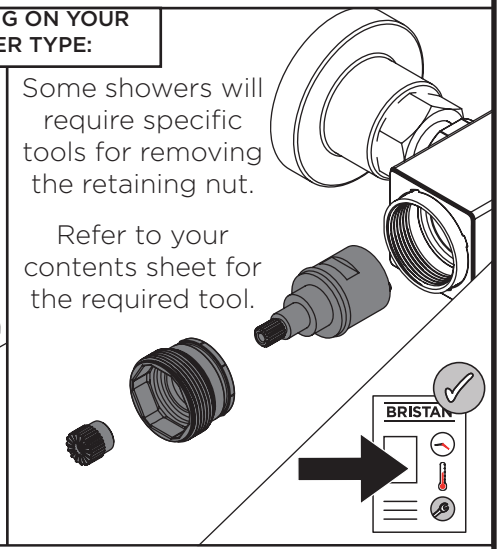

3

Remove temperature stop, nut and cartridge. Depending on your shower you may need a specific cartridge tool (not supplied), or check for the grub screw underneath the bar valve to remove.

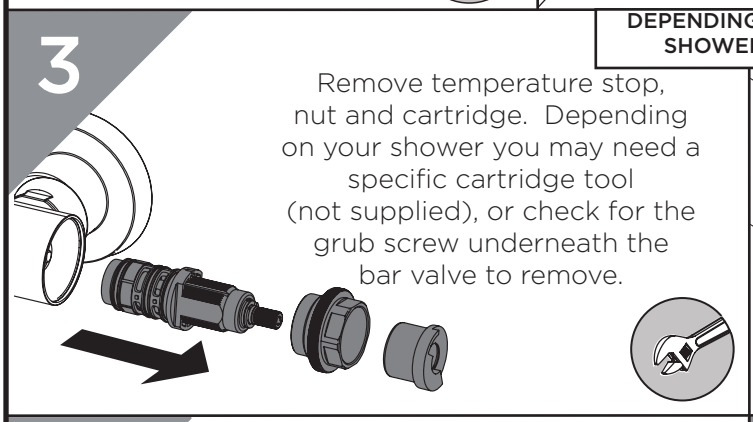

DEPENDING ON YOUR SHOWER TYPE:

For cartridges without a retaining nut, we recommend replacing the handle screw back into the end of the cartridge, then gripping it with pliers to pull out the cartridge.

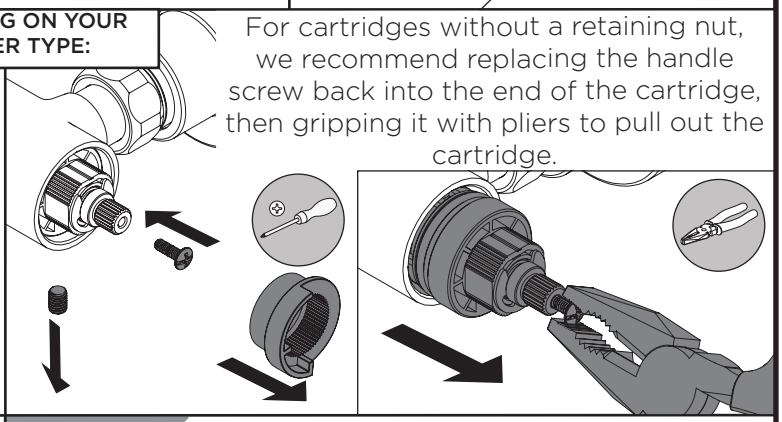

4

Remove O-rings and soak all components in de-scaler and wash off in clean water.

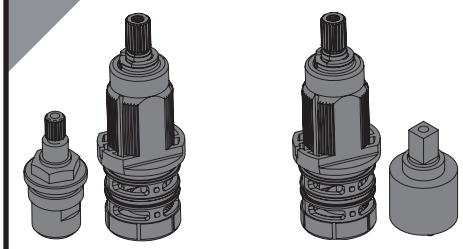

Examine all seals and replace if needed.

Use WRAS approved silicon based grease on all seals.

5

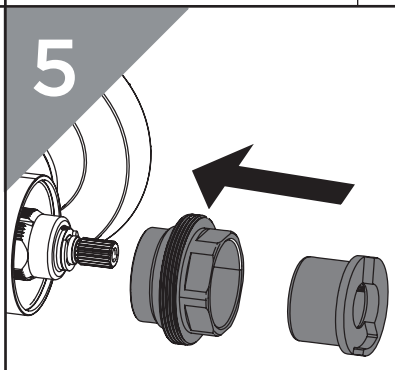

Replace retaining nut and grub screw (if required) and temperature stop.

Ensure the raised side is facing towards the back of the valve.

6

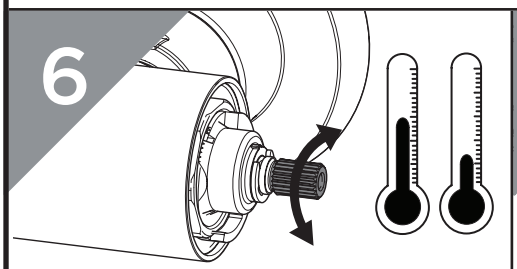

Turn cartridge spindle clockwise to decrease the temperature. Turn cartridge spindle anti-clockwise to increase the temperature.

7

Slide handle onto adaptor and turn clockwise until you meet resistance.

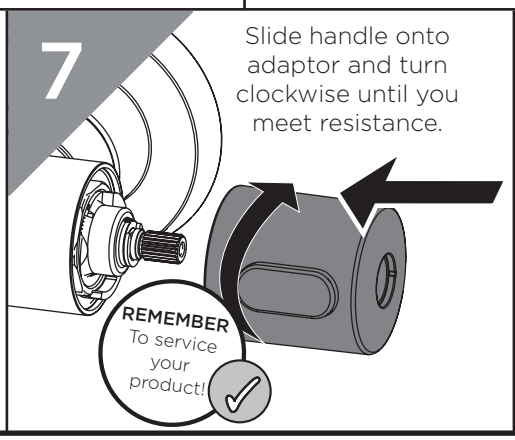

8

Reverse steps 1-2 to reinstall the valve/cartridge and secure handles.

Refer to the 'Temperature Setting' maintenance steps to re-calibrate the max. temperature.

General Cleaning

Bristan products are made from premium materials, with hand polished, PVD, EPD or electroplated finishes.

Your bar shower should be regularly cleaned with warm water, a mild pH-neutral liquid soap, and polished with a soft cloth. Any residues from soap, toothpaste, shampoos and shower gels can cause blemishes if not rinsed off straight after use.

Household bleaches and cleaners contain harsh chemicals and may damage the surface finish. Avoid using abrasive cloths, scouring pads, scrub sponges, steel wool or anything similar. Some surfaces such as nickel and pewter may be affected by the dye found in some cloths, so it is also important to avoid hanging cloths on fittings/barshowers etc.

Servicing Intervals

To reduce the build up of limescale and to ensure this shower works to its maximum performance we recommend this shower is serviced every 6-12 months depending on the hardness of your water.

Spare Parts

To replace any spare parts for your shower why not scan the below QR Code and search for your product.

Notes

Troubleshooting

Symptom	Cause	Remedy
No flow or low flow rate	Partially closed isolation valve.	Open isolation valve.
	Instantaneous water heater cycles on and off as flow rate or pressure is too low.	Increase water flow rate or pressure through system.
	Head of water is below the minimum distance required.	Refer to the specification for the minimum distance required.
	Are the water supply pressures balanced?	If pressures are unbalanced, a pressure reducing valve should be used for optimum performance.
	Hot or cold water being drawn off elsewhere causing pressure changes or instantaneous boiler temperature changes.	Do not use other water outlets when using the shower.
	Airlock or partial blockage in the supply pipework.	Flush through pipework and filters to ensure removal of debris and any airlocks.
	Hot/Cold water supply has failed	Check the hot and cold feeds. The shower will not work if either fails.
Outlet Water Temperature too Hot/Cold	Maximum Water Temperature needs adjusting.	Refer to the Temperature Setting section to set your desired maximum temperature.
	Filter/pipe blockage	Flush through pipework and filters to ensure removal of debris and any airlocks.
	Installation conditions outside operating parameters.	Refer to the specification for the minimum distance required.
	Hot water temperature is less than 10°C above the required blend temperature	Adjust hot water temperature or wait for water to reheat if a stored water system is used.
	Instantaneous water not igniting because the water flow rate is too low.	Increase water flow rate through the system. Refer to the Maintenance section to clean/ check the cartridge and filters for any damage. Contact your boiler manufacturer.
	Instantaneous water not igniting because the water pressure is too low.	Refer to the specification for system requirements. Increase water pressure through the system. Contact your boiler manufacturer.
Only hot/cold water from Shower Valve	Inlet water supplies are reversed.	Check the water inlet connections are the correct way around: Hot on the left, Cold on the right when viewed from the front. Rework pipework as necessary.
	Filter/pipe blockage	Flush through pipework and filters to ensure removal of debris and any airlocks.
Water dripping from shower	This is normal for a short time after using the shower.	This is caused by residual water tension, the build up of water in the shower.
	If water continues to drip, possibly due to the cartridge	Remove cartridge and clean, refer to 'Maintenance' section before starting any maintenance.
Shower does not turn on	Closed isolation valve.	Open isolation valve.
	Mains water supply turned off.	Turn on mains water supply.

Issue: D3
Part Number: Bar SHWR WMNT

BRISTAN

Part of BRISTAN GROUP

Bristan Group Ltd.

UK: Bristan Group, B78 1SG.
Customer Service: +44330 026 6273
Web: www.bristan.com
Email: enquire@bristan.com

EU: FM Mattsson AB (publ)
Box 480
SE-792 27 Mora
Sweden
Email: info@fmmattssongroup.com

Our Guarantee

At Bristan, we want to make things as easy as possible for our customers. That's why we offer solid guarantees on all our products, effective from the date of purchase, to give you peace of mind.

To start your free guarantee simply scan the QR code and register your product. Alternatively visit **www.bristan.com/register**.

For any other queries, please call our Customer Service on 0330 026 6273 where our expert team of advisors will be able to offer you any help and advice.

For full guarantee terms and conditions visit **www.bristan.com/service-centre/guarantees**.

BRISTAN

Installation Instructions and User Guide

Rigid Riser &
Telescopic Riser Kits

Please keep this booklet for future reference.

Installer, when you have read these instructions please ensure you leave them with the user.

Introduction

Thank you for choosing Bristan, the UK's leading taps and showers expert. We have designed these products with your enjoyment in mind. To ensure that they work to their full potential, they need to be fitted correctly. These fitting instructions have been created to give you all of the information you need and, if you need any further help, please do not hesitate to give us a call on 0330 026 6273.

Contents

- Important Safety Information 3
- Prior to Installation 4
- Installation - Inline Diverter 5
- Installation - Rigid Risers 6-8
- Installation - Telescopic Round Risers 9
- Installation - Telescopic Square Risers 10
- General Cleaning 11
- Troubleshooting 11

Important Safety Information

All products manufactured and supplied by Bristan are safe to use provided that they are installed, operated and receive regular maintenance in accordance with these instructions.

This product needs to be installed in accordance with, and meet the requirements of the Water Supply (Water Fittings) Regulations 1999 and current by-laws.
For full Installation Requirements & Notes (IRN) please visit
www.wrasapprovals.co.uk/approvals-directory

This product must not be modified in any way as this will invalidate the guarantee.

Full access must be made available for future maintenance/servicing purposes.

Before drilling into walls, check that there are no hidden electrical wires, cables or water supply pipes. This can be checked with the aid of an electronic detector.

If power tools are used do not forget to:

- Wear eye protection

- Unplug equipment after use

If in doubt, contact a registered plumber or your Local Water Authority or the Secretary of the Institute of Plumbing, address as follows:-

The Institute of Plumbing,
64 Station Lane,
Hornchurch,
Essex,
RM12 6NB, Tel: 01708 472791

Prior to Installation

The installation images are for illustrative purposes only, and your product may slightly differ in installation, depending on specification. Please refer to your specific shower kit contents page for specification information.

These kits are designed to be used in conjunction with Bristan showers. We cannot guarantee compatibility or adequate performance when used with other showers.

Please refer to the installation manual supplied with your Bristan shower kits for their specification information. Your kit could also have adjustability at the wall arm as a telescopic riser, or come with an in-line diverter kit.

This shower kit must be installed in compliance with current water regulations. If you have any doubts about the water regulation requirements contact your local water services provider or use the services of a professional plumber.

Crucial Dimensions

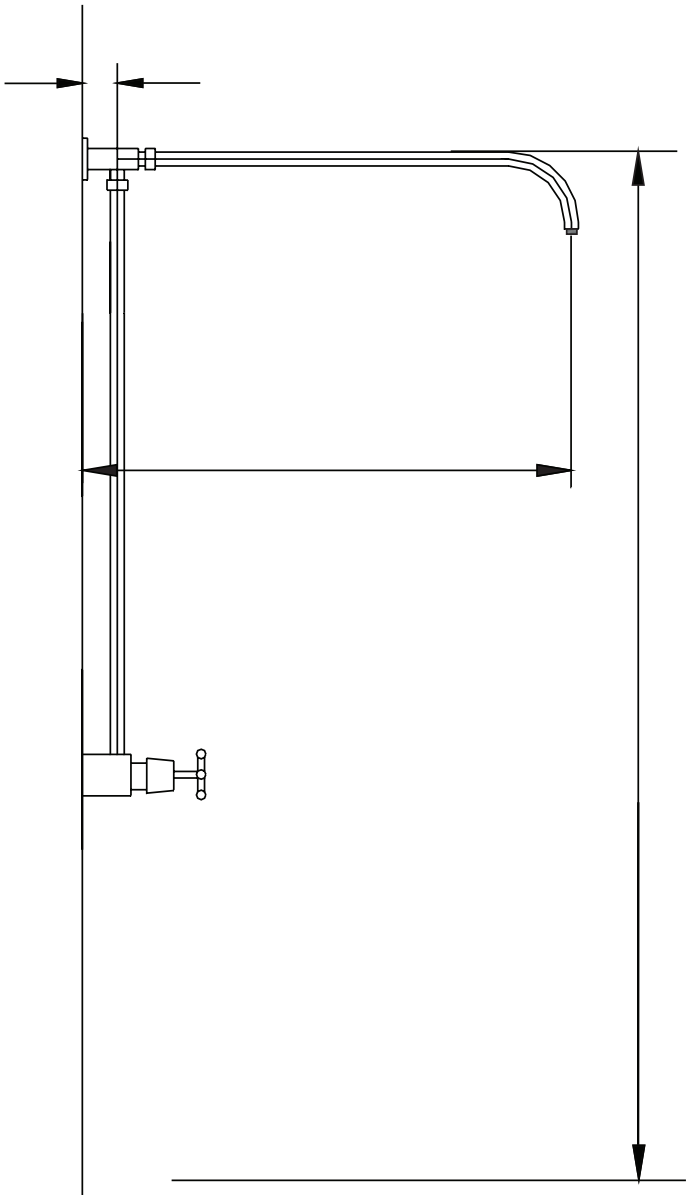

Loosely assemble the riser, making sure it can reach the connection point on your fitting and the bracket will stay flush to the wall.

Plan your installation to accommodate for the tallest user, and measure the crucial dimensions for your installation. Use the diagram to take notes.

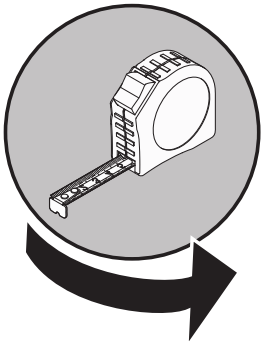

Installation - Inline Diverter

1

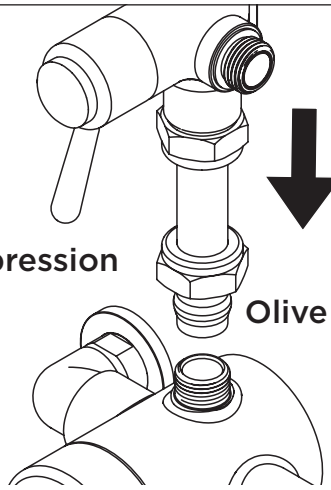

Push the short connecting tube into the top outlet on the shower valve (not supplied). If your outlet connection is 15mm, please use the adaptor supplied before attaching the riser tube. Ensure the nut and olive are fitted to the connecting tube. Tighten the compression nut fully using a suitable spanner.

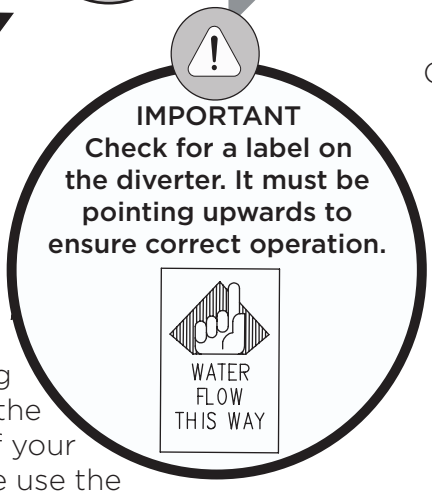

2

Fit the rigid riser to the diverter valve. Tighten the compression nut fully using a suitable spanner to ensure a watertight seal. Connect your chosen hose and handset.

Check your rigid riser kit bracket type to move to the next stage of installation.

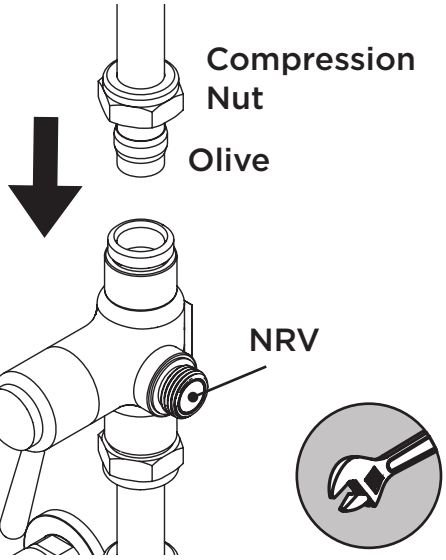

Important: If using this product on a low pressure system (0.2 - 0.5bar) we recommend the NRV in the diverter to be removed to ensure maximum flow.

Installation - Rigid Risers

1

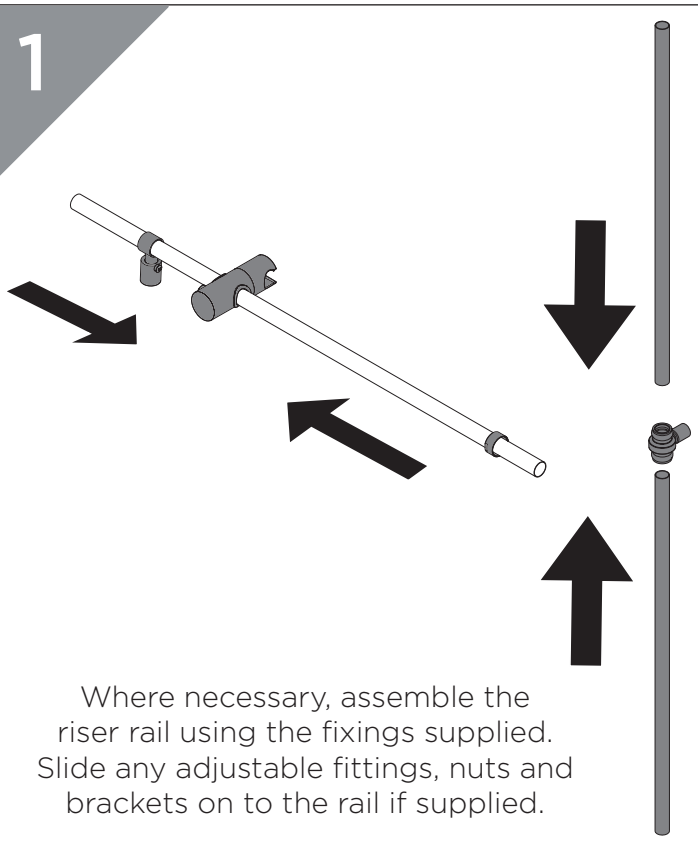

Where necessary, assemble the riser rail using the fixings supplied. Slide any adjustable fittings, nuts and brackets on to the rail if supplied.

2a

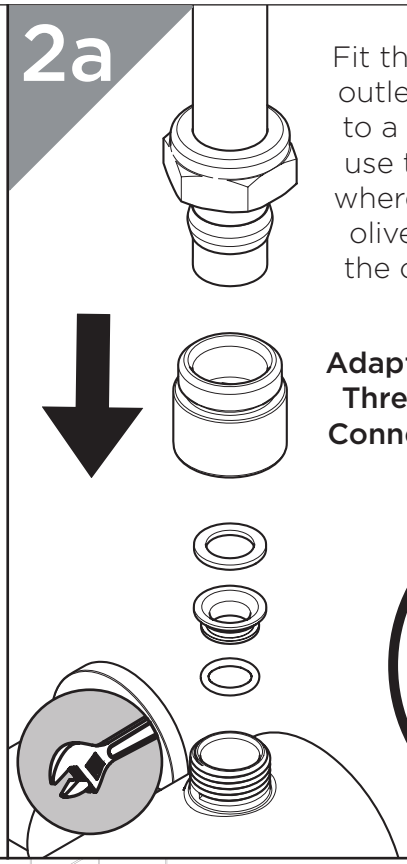

Fit the rigid riser to the top outlet. If attaching directly to a threaded connection, use the threaded adaptor where supplied. Ensure the olive is fitted and tighten the compression nut fully.

Adaptor for Threaded Connection

IMPORTANT

Do not over tighten fixings. Wrap pipes in cloth when tightening to prevent damage to the finish.

2b

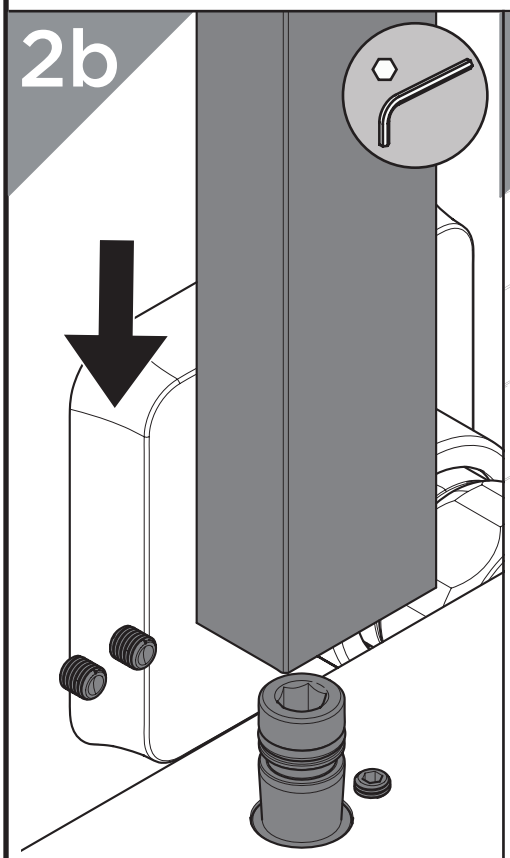

Your riser rail could also be attached via grub screws. Check around the back or sides for grub screw placement.

3

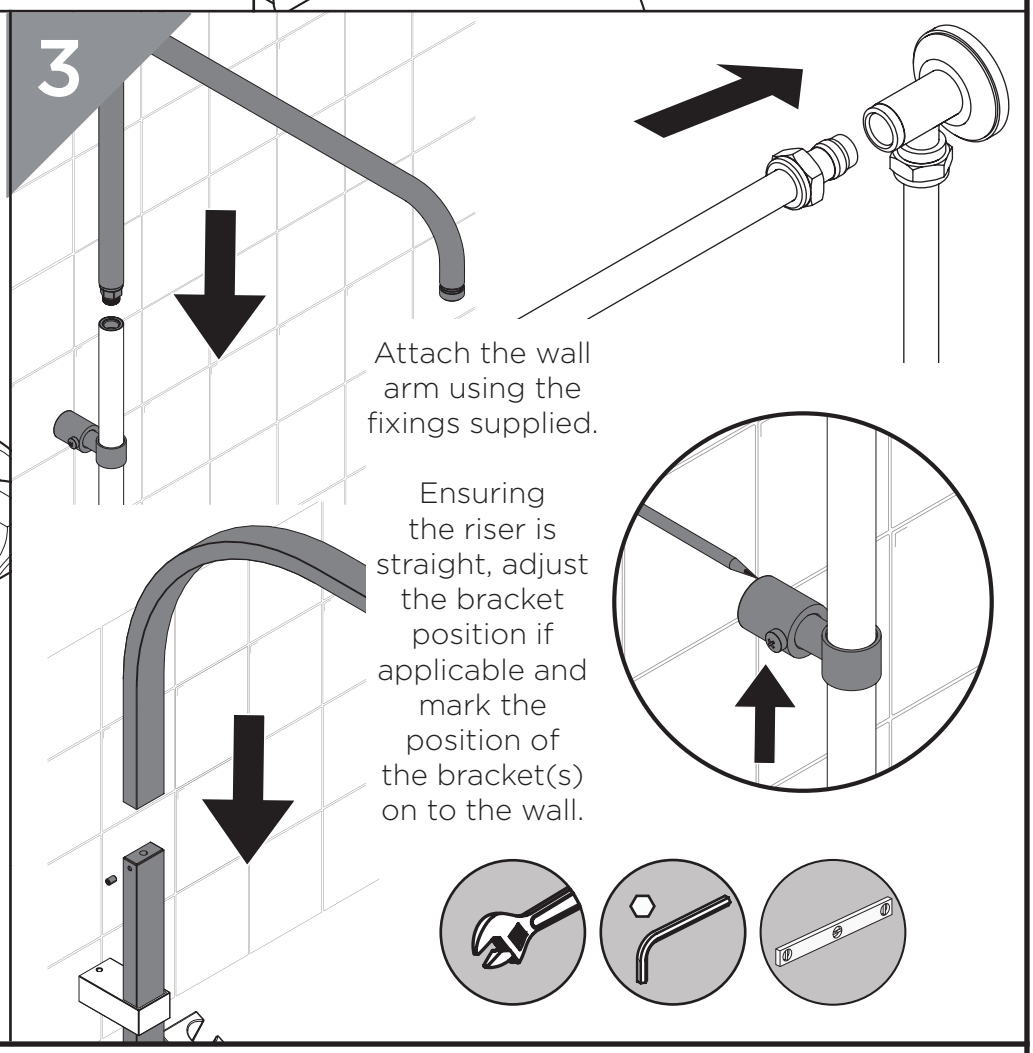

Attach the wall arm using the fixings supplied.

Ensuring the riser is straight, adjust the bracket position if applicable and mark the position of the bracket(s) on to the wall.

 Need help? Give us a call on 0330 026 6273 and speak to one of our trained advisors.

Installation - Rigid Risers

4

Disassemble the bracket to reveal the fixings/fixing holes. Align in the marked area on the wall and mark up the fixing holes.

REMEMBER
Check for hidden pipes and cables before drilling!

5

Drill the fixings holes and secure the bracket/ bracket fixings to the wall using the fixings supplied.

6

Re-locate riser rail back on to the bracket/bracket fixings. Secure in place. Re-attach the wall arm if necessary.

Installation - Rigid Risers

7

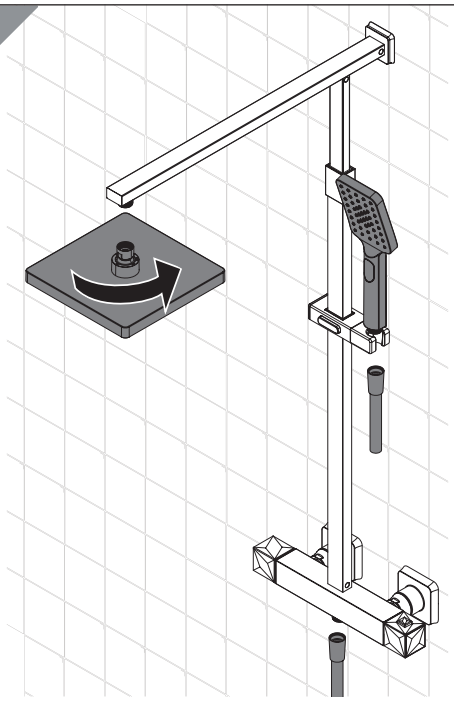

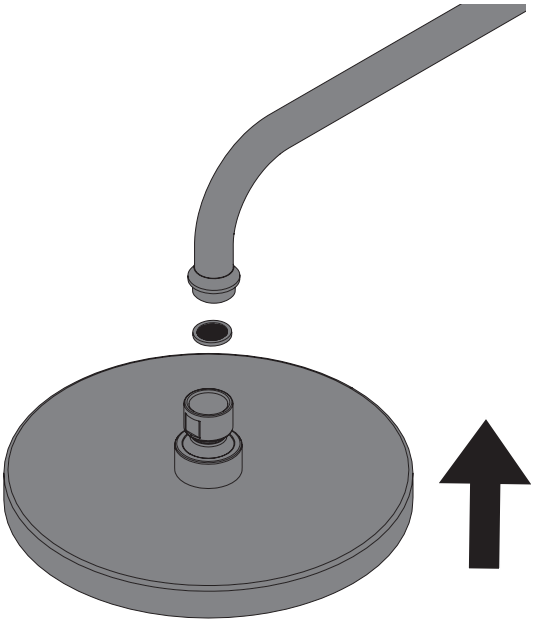

Attach the fixed head, handset (if supplied) and hose (if supplied) to the shower. Ensure the sealing washers are in place if supplied. Turn on the water supply and check all joints and connections for any leaks.

Installation - Telescopic Square Risers

1

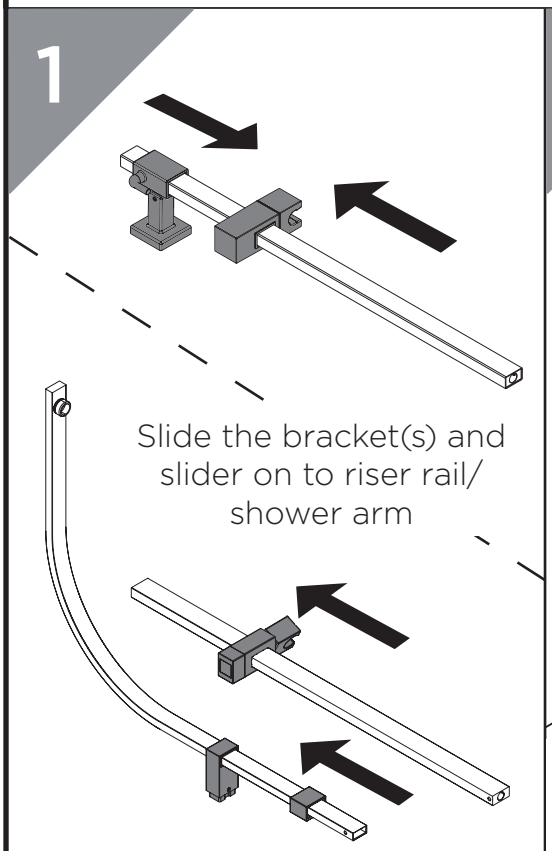

Slide the bracket(s) and slider on to riser rail/ shower arm

2

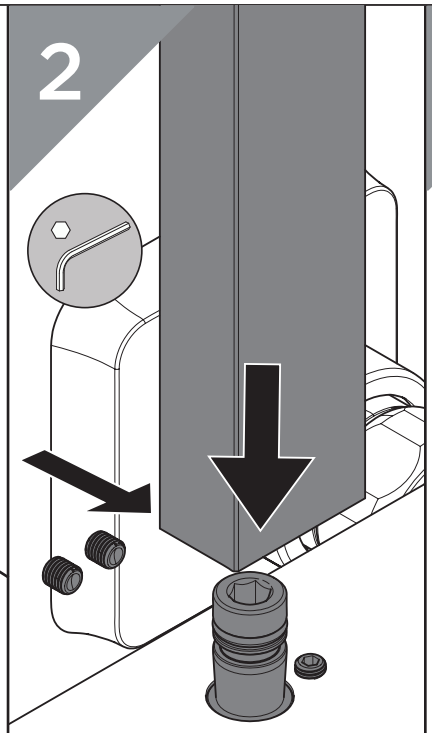

Attach the riser rail to the shower. Check for grub screw(s) placement and secure in place.

3

Insert the shower arm into the riser rail.

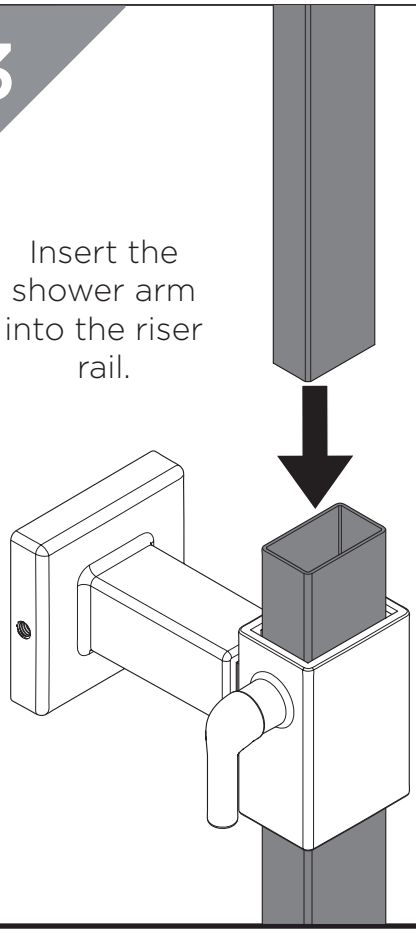

 Need help? Give us a call on 0330 026 6273 and speak to one of our trained advisors.

Installation - Telescopic Square Risers

4

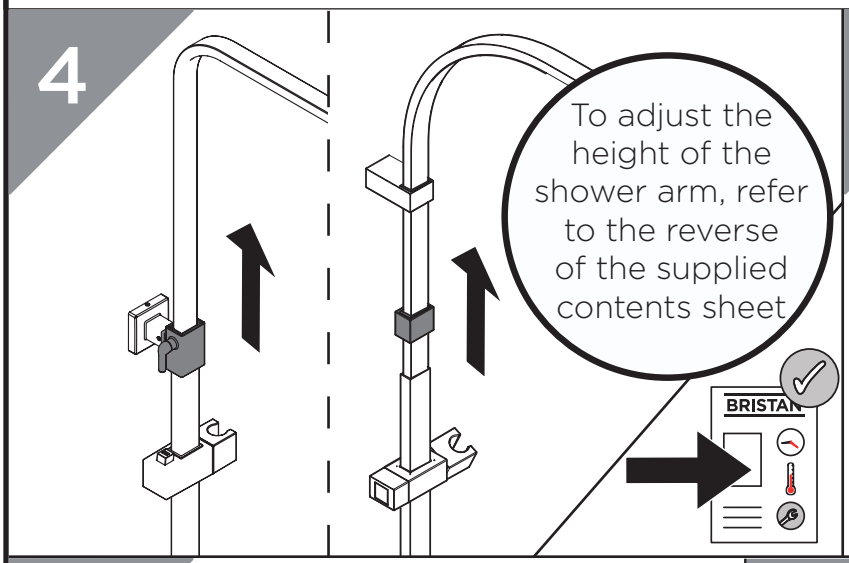

5

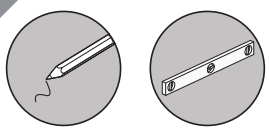

Using a spirit level to ensure the riser is positioned correctly, use the assembled riser to mark the desired position of the bracket.

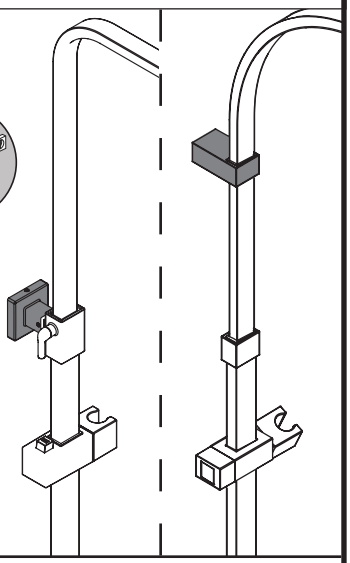

6

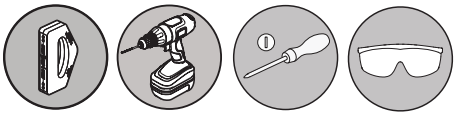

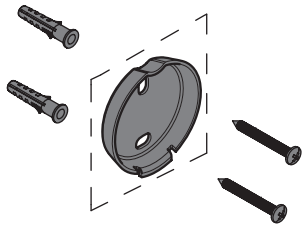

Drill holes. Secure the bracket to the wall.

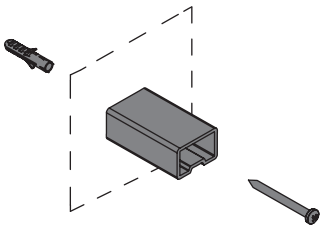

7

Attach the bracket shroud if applicable.

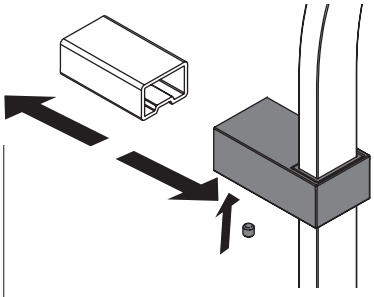

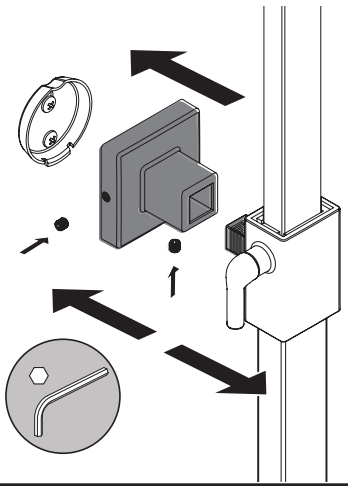

Push the riser rail on to the bracket until the riser is aligned straight. Secure with the grub screw.

8

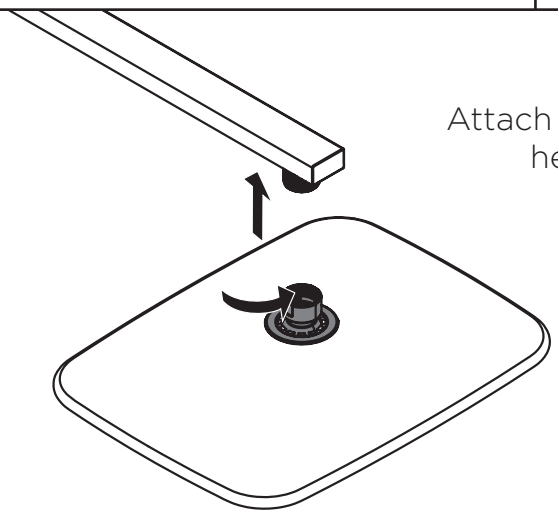

Attach the fixed head.

To adjust the height, refer back to shower arm adjustment on your contents sheet.

Installation - Telescopic Round Risers

1

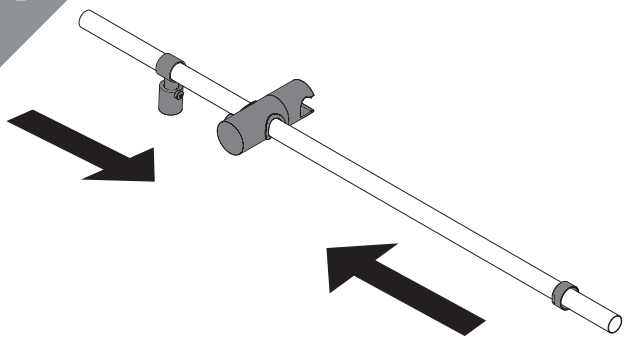

Slide the bracket, slider and nut on to the riser rail.

2

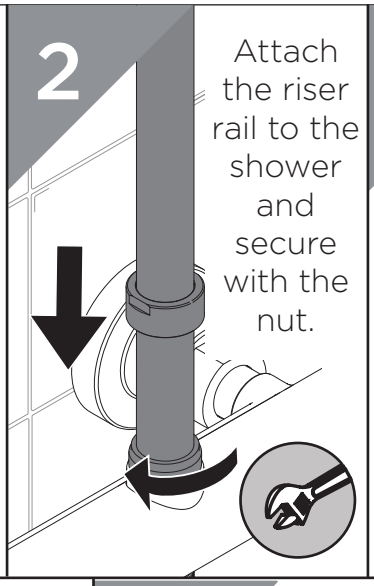

Attach the riser rail to the shower and secure with the nut.

3

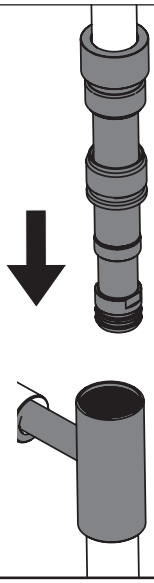

Push the shower arm into the riser rail.

4

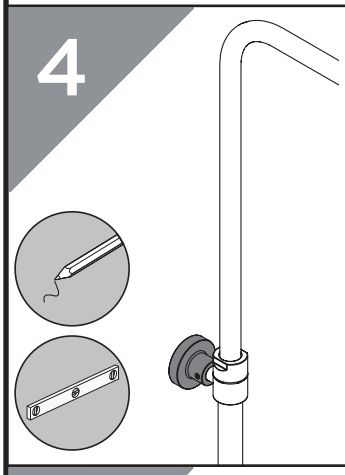

Using a spirit level to ensure the riser is positioned correctly, use the assembled riser to mark the desired position of the bracket.

5

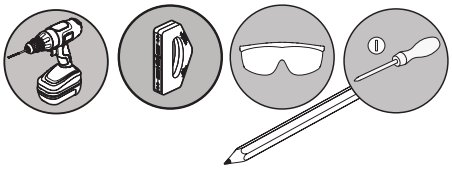

Disassemble bracket, align on the wall in the correct position and mark location of holes to be drilled.

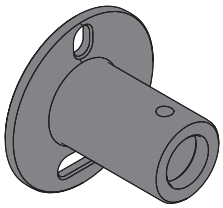

Secure the bracket to the wall.

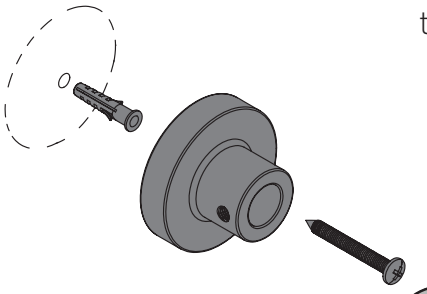

REMEMBER

Check for hidden pipes and cables before drilling!

6

Attach the bracket shroud if applicable.

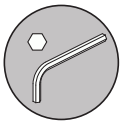

Push the riser rail on to the bracket until the riser is aligned straight. Secure with the grub screw.

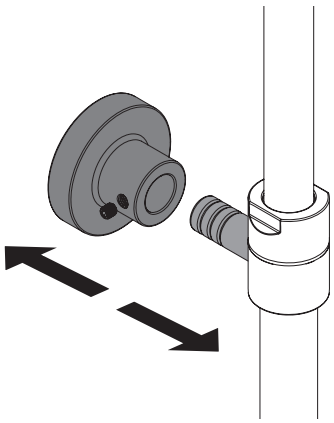

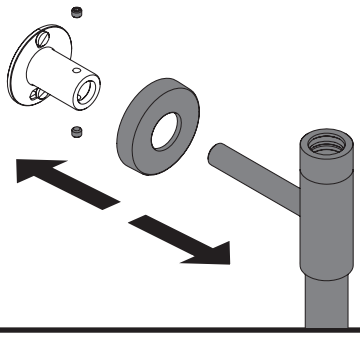

7

Attach the fixed head.

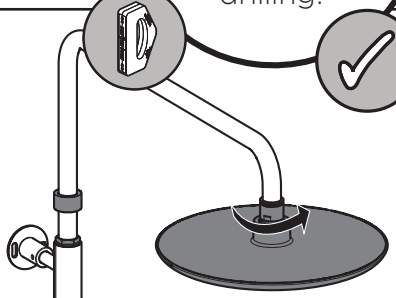

To adjust the height of the shower arm, refer to the reverse of the supplied contents sheet.

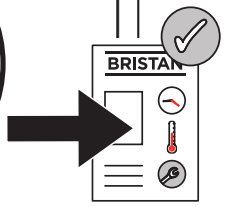

 Need help? Give us a call on 0330 026 6273 and speak to one of our trained advisors.

General Cleaning

Bristan products are made from premium materials, with hand polished, PVD, EPD or electroplated finishes.

Your product should be regularly cleaned with warm water, a mild pH-neutral liquid soap, and polished with a soft cloth. Any residues from soap, toothpaste, shampoos and shower gels can cause blemishes if not rinsed off straight after use.

Household bleaches and cleaners contain harsh chemicals and may damage the surface finish. Avoid using abrasive cloths, scouring pads, scrub sponges, steel wool or anything similar.

Some surfaces such as nickel and pewter may be affected by the dye found in some cloths, so it is also important to avoid hanging cloths on surfaces.

Troubleshooting

Symptom	Cause(s)	Remedy
No flow or low flow rate	Partially closed isolation valve.	Open isolation valve.
	Head of water is below the minimum distance required.	Refer to your specific product's Contents Page for the minimum working pressure/distance required.
	Inlet filter in the shower valve is blocked	Refer to the shower fitting instructions for Maintenance steps.
	Hot or cold water being drawn off elsewhere causing pressure changes or instantaneous boiler temperature changes.	Do not use other water outlets when using the taps.
	Airlock or partial blockage in the supply pipework or hoses.	Flush through pipework to ensure removal of debris and any airlocks.
	Shower hose is kinked, causing a blockage.	Un-kink the shower hose and check for any damage, Replace if necessary.
	Water supply failure	Investigate water supply. Check your plumbing and heating systems for any faults.
Water dripping from shower kit	This is normal for a short time after using the shower.	This is caused by residual water tension, the build up of water in the tap body.
	If water continues to drip, possibly due to the ceramic disc valves/ cartridge	Refer to the Maintenance section of your shower instructions to replace the valves/cartridge.

Issue: D3
Part Number: FI Fix-Tel Kits

BRISTAN

Part of BRISTAN GROUP

Bristan Group Ltd.

UK: Bristan Group, B78 1SG.
Customer Service: +44330 026 6273
Web: www.bristan.com
Email: enquire@bristan.com

EU: FM Mattsson AB (publ)
Box 480
SE-792 27 Mora
Sweden
Email: info@fmmattssongroup.com

Our Guarantee

At Bristan, we want to make things as easy as possible for our customers. That's why we offer solid guarantees on all our products, effective from the date of purchase, to give you peace of mind.

To start your free guarantee simply scan the QR code and register your product. Alternatively visit **www.bristan.com/register**.

For any other queries, please call our Customer Service on 0330 026 6273 where our expert team of advisors will be able to offer you any help and advice.

For full guarantee terms and conditions visit **www.bristan.com/service-centre/guarantees**.