BRISTAN

Installation Instructions & User Guide

Please leave these instructions with the end user

Elevar Bath Shower Mixer Range | ELE BSM BLK D21)

Specifications

Dynamic Water Pressure

Min: 0.3 bar **Max:** 5.0 bar

Maximum Static Pressure: 10.0 bar

Inlet Water Temperature

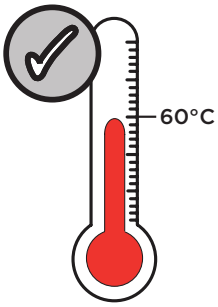

Maximum Hot 60°C

Inlet Connections

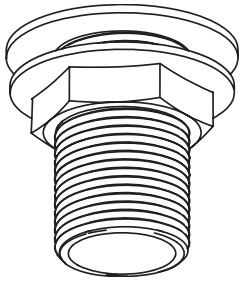

3/4" BSP

Outlet

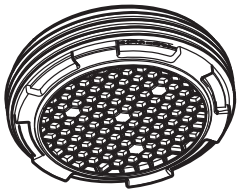

M24 Recessed Honeycomb Aerator

Pack Contents

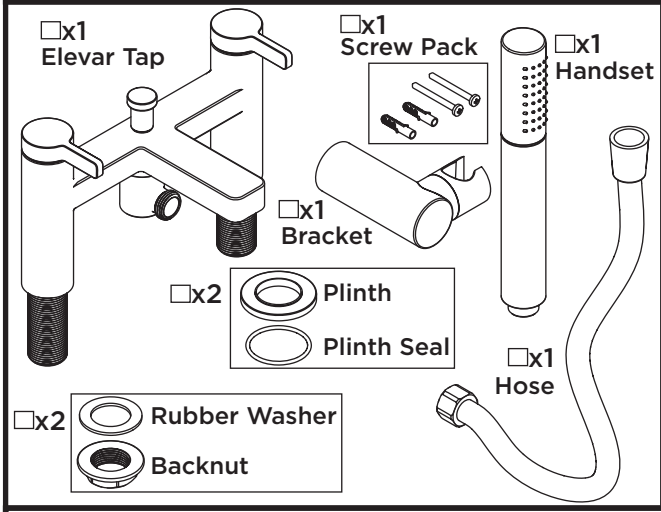

Operation

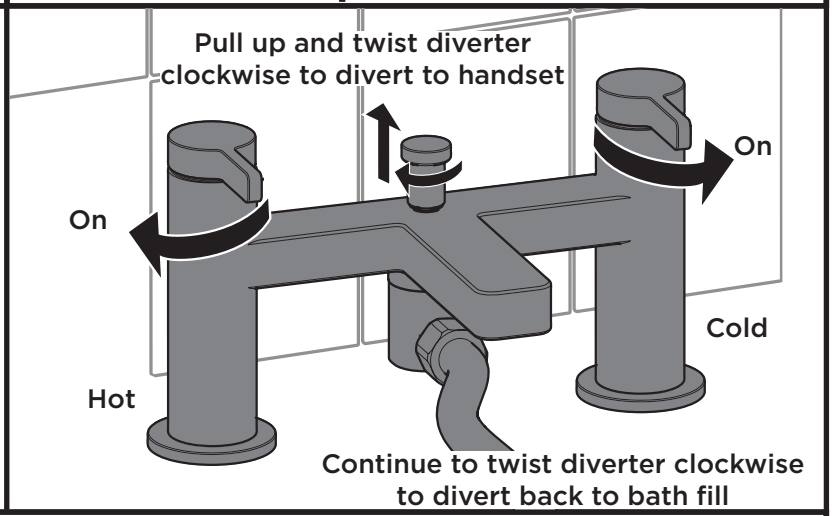

Tools Required for Installation/ Maintenance

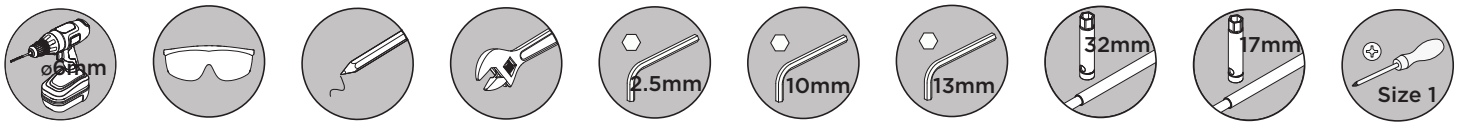

Drill | Safety Glasses | Pencil | Adjustable Spanner | Hexagonal Key (Grub Screws) | Hexagonal Key (Brass Adapter) | Hexagonal Key (Diverter) | Box Spanner (Inlets) | Box Spanner (Cartridge) | Philips Head Screwdriver

Prior to Installation

All products manufactured and supplied by Bristan are safe to use provided that they are installed, operated and receive regular maintenance in accordance with these instructions.

This product needs to be installed in accordance with, and meet the requirements of The Water Supply (Water Fittings) Regulations (Northern Ireland) 2009 and The Water Supply (Water Fittings) (Scotland) Byelaws 2014. For full Installation Requirements & Notes (IRN) please visit www.wrasapprovals.co.uk/approvals-directory

Isolation valves must be fitted to the inlet water supplies to ensure ease of future maintenance. Before installing this product the water supply must be thoroughly flushed in order to remove any swarf, solder etc. Full access must be made available for future maintenance/servicing purposes.

If power tools are used do not forget to: - Wear eye protection - Unplug equipment after use

This product must not be modified in any way as this will invalidate the guarantee.

Spare Parts

To replace any spare parts for your tap, why not scan the QR Code or visit **www.bristan.com** and search for your product.

Installation - Wall Bracket

1

Remove the back of the bracket by pushing in the clip on the bottom.

2

Position the wall bracket where you want it and mark out where to drill. Make sure the hose and handset can reach.

IMPORTANT
Prior to drilling into walls, check there are no hidden electrical wires, cables or water supply pipes

3

Drill holes and fit wall plugs then secure the back of the bracket to wall using screws provided.

Once fixed, replace the bracket lid.

4

Check handset sits securely on the wall bracket and there is no movement.

Your bracket is now ready to use

Maintenance - Diverter Replacement

1

Unscrew the hose from the elbow connection.

2

Unscrew the diverter head by twisting anti-clockwise.

3

2.5mm

Unscrew grub screw and remove the elbow.

4

10mm

Insert hex key and unscrew to remove brass adapter and rubber washer.

5

Insert hex key and unscrew to remove diverter.

13mm

6

Check diverter and O-rings for any damage, then soak using a suitable solution to de-scale.

7

Reverse the steps to replace the diverter.

Elbow Adjustment

Remove the grub screw on the back.

2.5mm

Adjust to desired angle and replace grub screw to secure.

Important

The images shown are for illustrative purposes only.
The tap you have purchased may look different to those pictured in this booklet but will follow the same installation steps.

Your contents page will be specific to your product.
If you find your product or any of its components differ from those shown on the contents page, please contact our customer support.

Installation

1

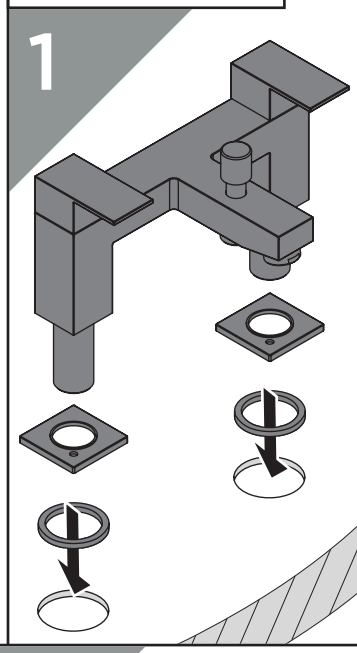

Feed the tap body through the plinths and ensure rubber plinth seals are in place

Once aligned, feed the threaded tails through tap holes

IMPORTANT
Your model may come with a plinth and will either be included pre-attached or loose in the box*

1*

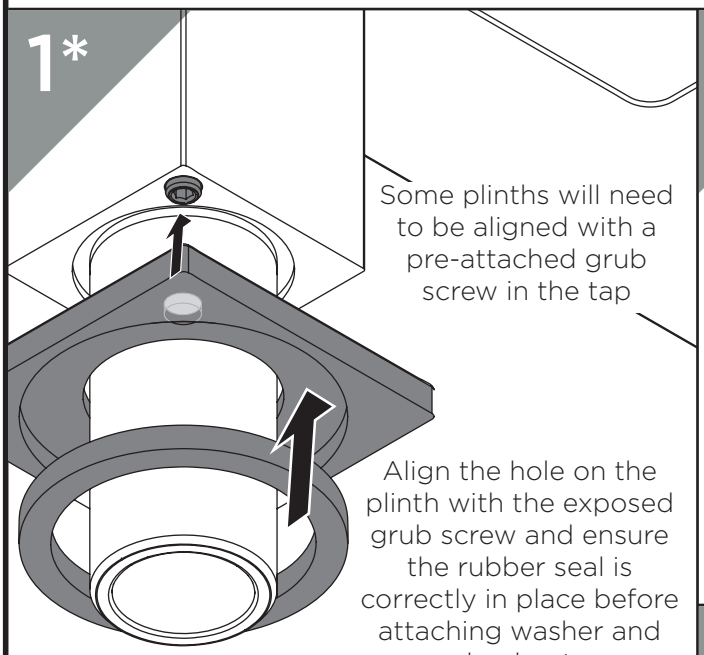

Some plinths will need to be aligned with a pre-attached grub screw in the tap

Align the hole on the plinth with the exposed grub screw and ensure the rubber seal is correctly in place before attaching washer and backnut

2

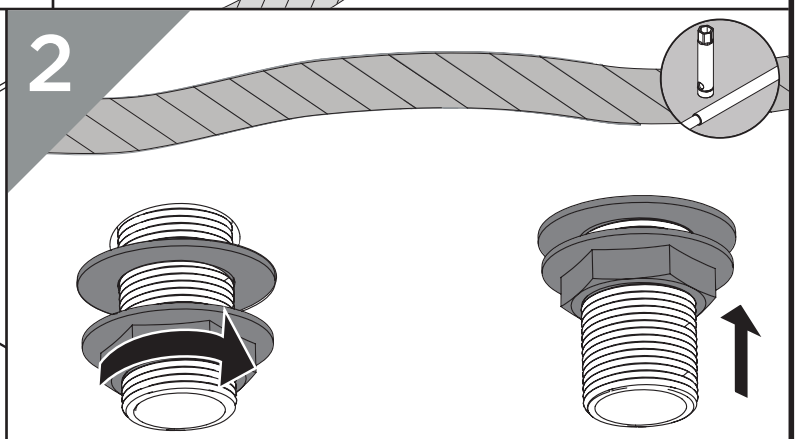

To secure the taps to the bath, use a box spanner to tighten the metal backnuts underneath ensuring the washer is correctly positioned in between the backnuts and the bath

3

Connect the hot and cold water supplies to the threaded tails

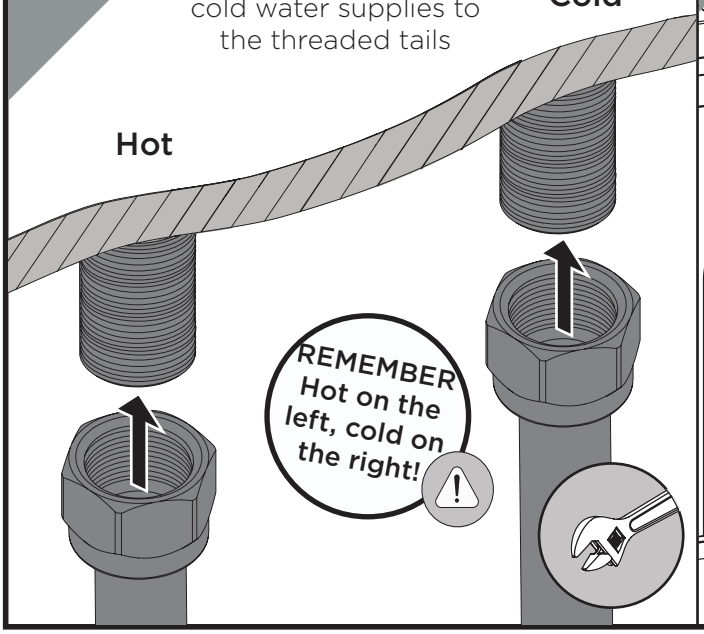

4

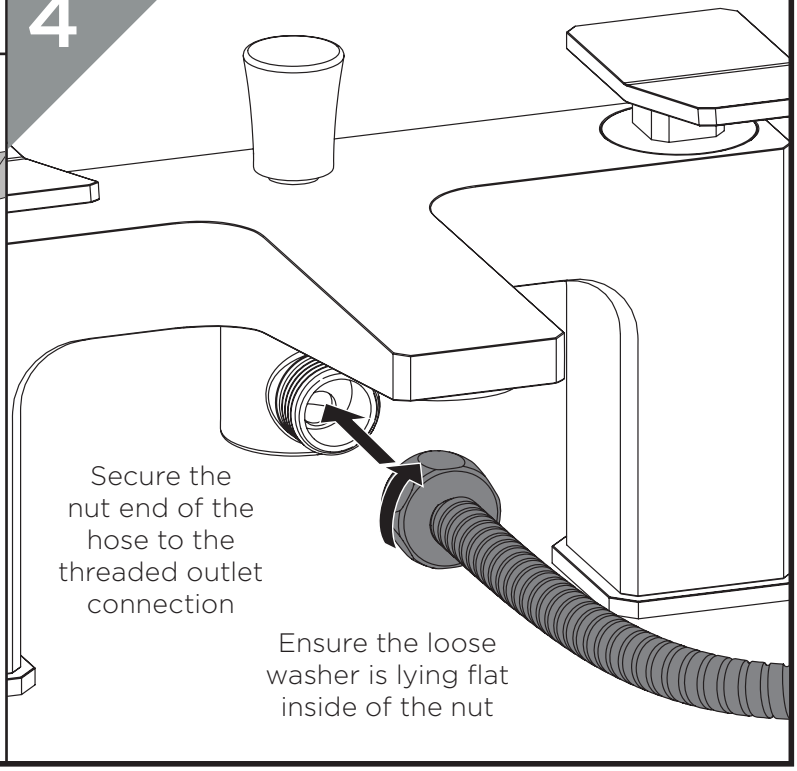

Secure the nut end of the hose to the threaded outlet connection

Ensure the loose washer is lying flat inside of the nut

5

Secure the cone end of the hose onto the threaded inlet connection of the handset

If your model has one, ensure the loose washer is lying flat inside of the cone connection

IMPORTANT
Turn on water supply for a few minutes and check all joints and connections for any leaks.

Your tap is now ready to use

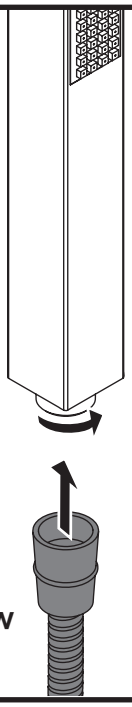

6

Please refer to your product's contents page to install the wall bracket.

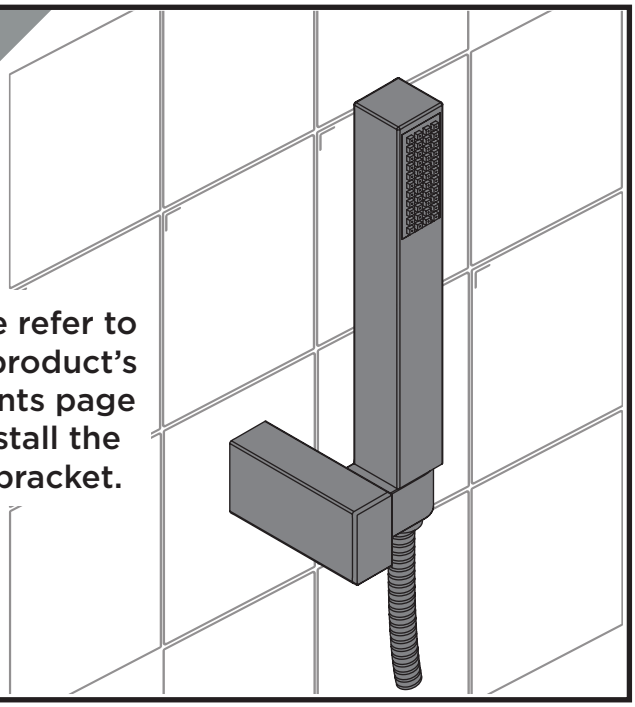

Maintenance - Valve Replacement

PLEASE NOTE - Taps shown in these instructions are for illustration purposes only. All taps can be maintained using these instructions.

1

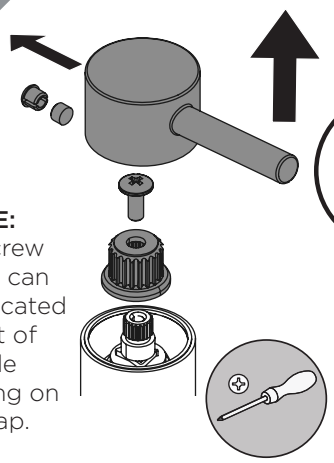

NOTE:
Grub screw and cap can also be located at front of handle depending on your tap.

IMPORTANT
Isolate the water supply before starting!

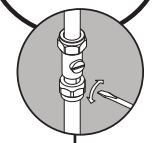

Remove the handles depending on the style of your tap, including any spline adaptors if used.

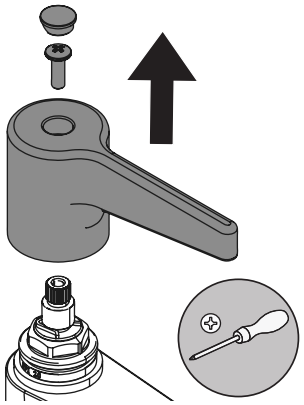

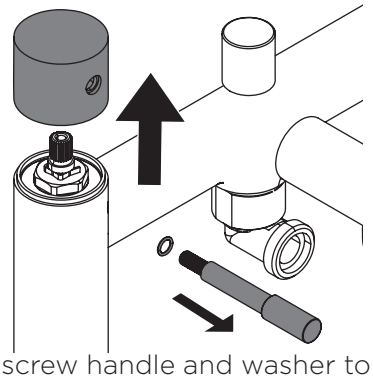

Unscrew handle and washer to remove the handles.

2

Remove the shrouds, screws and spline adaptors if your model has them.

When replacing, ensure valve is fully closed with the handle parallel to the spout.

3

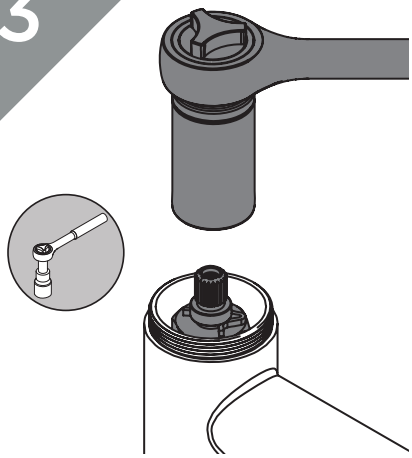

Remove the valve using the tool required for your tap. Check any seals and O-rings for damage. Replace valve if necessary.

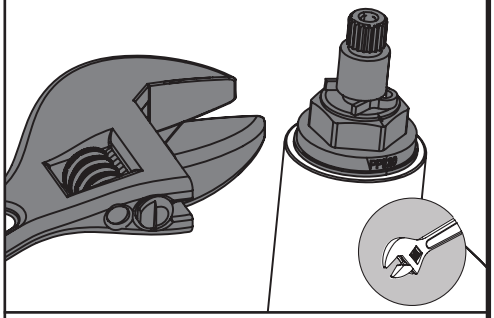

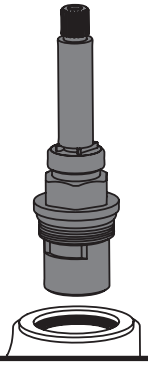

Take care when removing/ replacing your long stemmed valve, as the finish could be damaged or scratched.

Maintenance - Valve Replacement

4

Visit **www.bristan.com** or scan the QR Code and search for your product code to replace the cartridge for your tap.

5

Reverse the steps to replace the valves and handles.

Maintenance - Clean/ Replace Outlet

1a

Housed Outlet

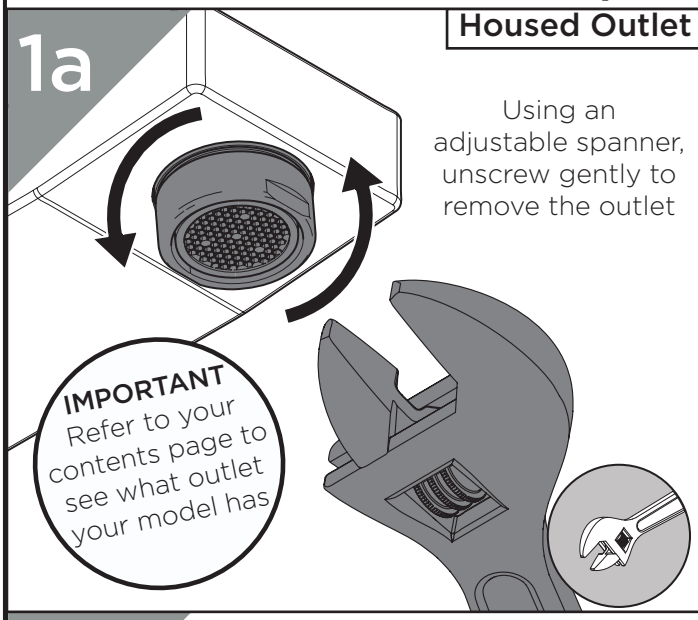

Using an adjustable spanner, unscrew gently to remove the outlet

IMPORTANT
Refer to your contents page to see what outlet your model has

1b

Recessed Outlet

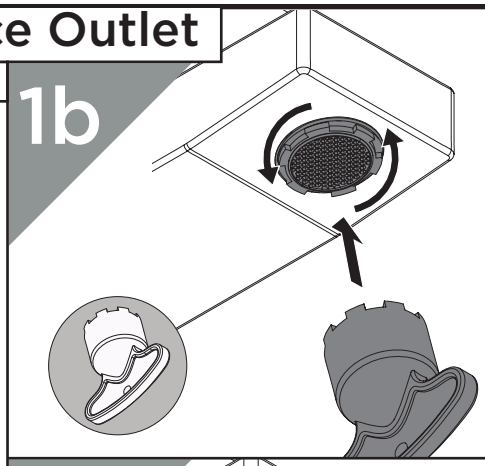

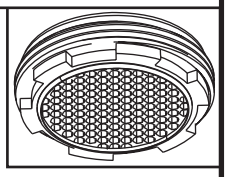

If provided, insert the key tool into the outlet and twist to release it

1c

Coin Slot Outlet

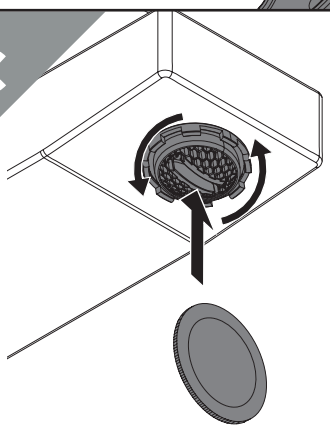

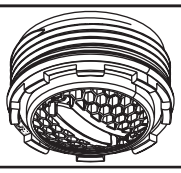

Using a coin, insert into the slot on the outlet and twist to release it

2

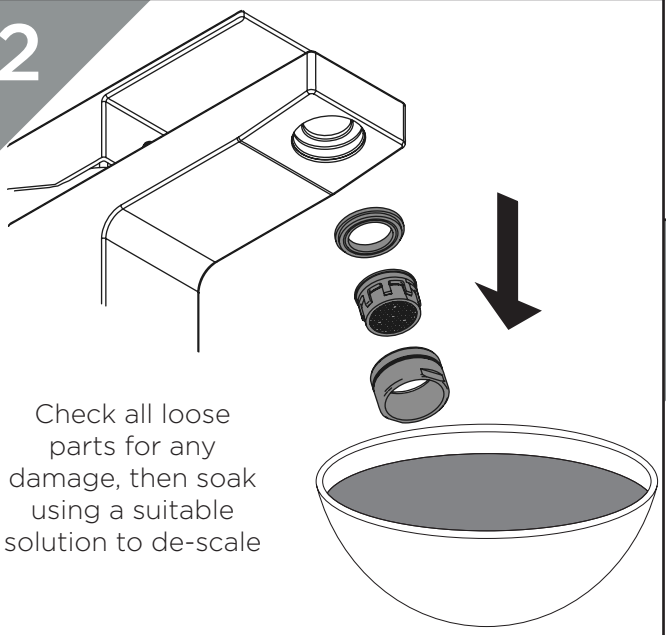

Check all loose parts for any damage, then soak using a suitable solution to de-scale

3

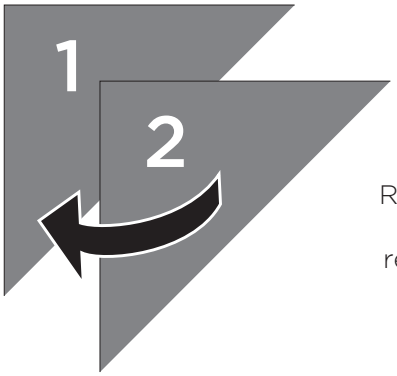

Reverse the steps to replace the outlet

Troubleshooting

Symptom	Cause	Remedy
No flow or low flow rate	Partially closed isolation valve.	Open isolation valve.
	Head of water is below the minimum distance required.	Refer to specification for minimum distance required.
	Hot or cold water being drawn off elsewhere causing pressure changes or instantaneous boiler temperature changes.	Do not use other water outlets when using the taps.
	Airlock or partial blockage in the supply pipework.	Flush through pipework to ensure removal of debris and any airlocks.
Water dripping from taps	This is normal for a short time after using the taps.	This is caused by residual water tension, the build up of water in the tap body.
	If water continues to drip, possibly due to the ceramic disc valves	Remove valves and replace, refer to 'Maintenance' section.
Taps do not turn on	Closed isolation valve.	Open isolation valve.
	Mains water supply turned off.	Turn on mains water supply.
Water not coming from handset when in use	Diverter mechanism not fully open.	Ensure diverter is fully open.
	Kink or blockage in hose	Make sure hose is free of any kinks and free to move. Remove handset and flush through hose.
	Head of water is below the minimum distance required.	Refer to specification for minimum distance required.

UK: Bristan Group, B78 1SG.
Customer Service: +44330 026 6273
Web: www.bristan.com
Email: enquire@bristan.com

EU: FM Mattsson AB (publ)
Box 480
SE-792 27 Mora
Sweden
Email: info@fmmattssongroup.com

Visit **ww**
QR Code an
to replac

Our Guarantee

At Bristan, we want to make things as easy as possible for our customers. That's why we offer solid guarantees on all our products, effective from the date of purchase, to give you peace of mind.

To start your free guarantee simply scan the QR code and register your product. Alternatively visit www.bristan.com/register.

For any other queries, please call our Customer Service on 0330 026 6273 where our expert team of advisors will be able to offer you any help and advice.

For full guarantee terms and conditions visit **www.bristan.com/service-centre/guarantees**