BRISTAN

Installation Instructions & User Guide

Please leave these instructions with the end user

LIS BF C (D3)

Specifications

Dynamic Water Pressure

Min: 0.2 bar **Max:** 5.0 bar

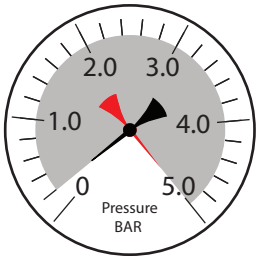

Maximum Static Pressure: 10.0 bar

Inlet Water Temperature

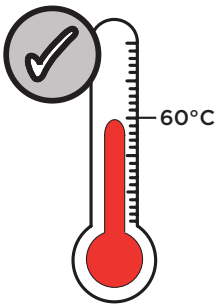

Maximum Hot 60°C

Inlet Connections

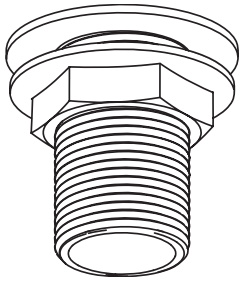

3/4" BSP

Outlet

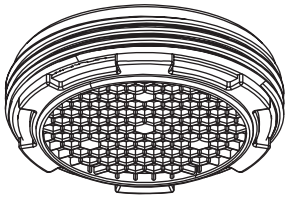

M24 Cache Aerator

Pack Contents

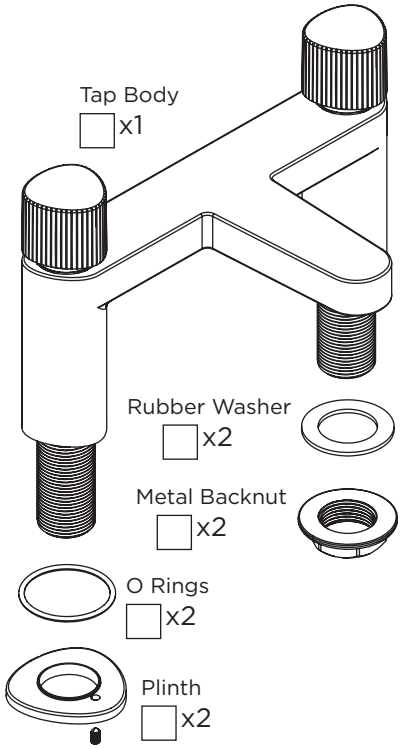

Operation

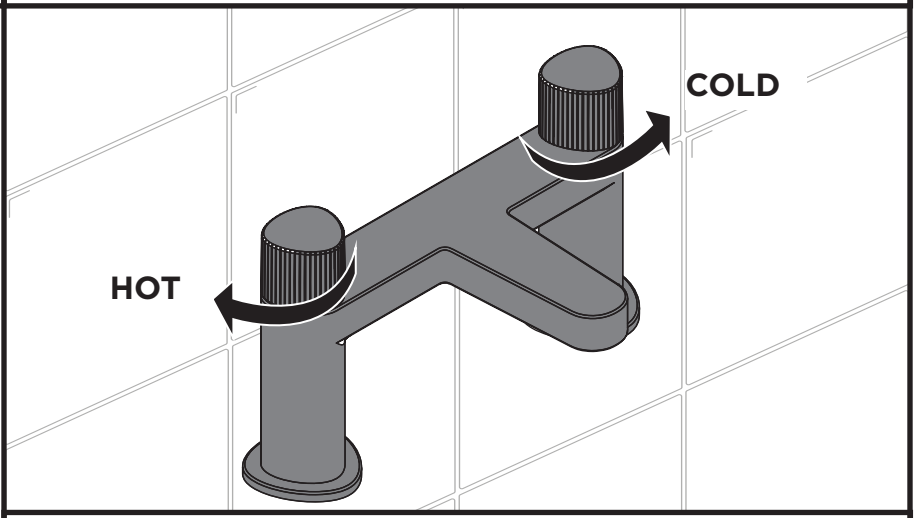

Tools Required for Installation/ Maintenance

Adjustable Spanner

Hexagonal Keys

Philips Head Screwdriver

Box Spanner (Inlets)

Box Spanner (Cartridge)

Prior to Installation

All products manufactured and supplied by Bristan are safe to use provided that they are installed, operated and receive regular maintenance in accordance with these instructions.

This product needs to be installed in accordance with, and meet the requirements of The Water Supply (Water Fittings) Regulations (Northern Ireland) 2009 and The Water Supply (Water Fittings) (Scotland) Byelaws 2014. For full Installation Requirements & Notes (IRN) please visit **www.wrasapprovals.co.uk/approvals-directory**

Isolation valves must be fitted to the inlet water supplies to ensure ease of future maintenance.

Before installing this product the water supply must be thoroughly flushed in order to remove any swarf, solder etc. Full access must be made available for future maintenance/servicing purposes.

This product must not be modified in any way as this will invalidate the guarantee.

Spare Parts

To replace any spare parts for your tap, why not scan the QR Code or visit **www.bristan.com** and search for your product.

Important

The images shown are for illustrative purposes only.
The tap you have purchased may look different to those pictured in this booklet but will follow the same installation steps.

Your contents page will be specific to your product.
If you find your product or any of its components differ from those shown on the contents page, please contact our customer support.

Installation

1

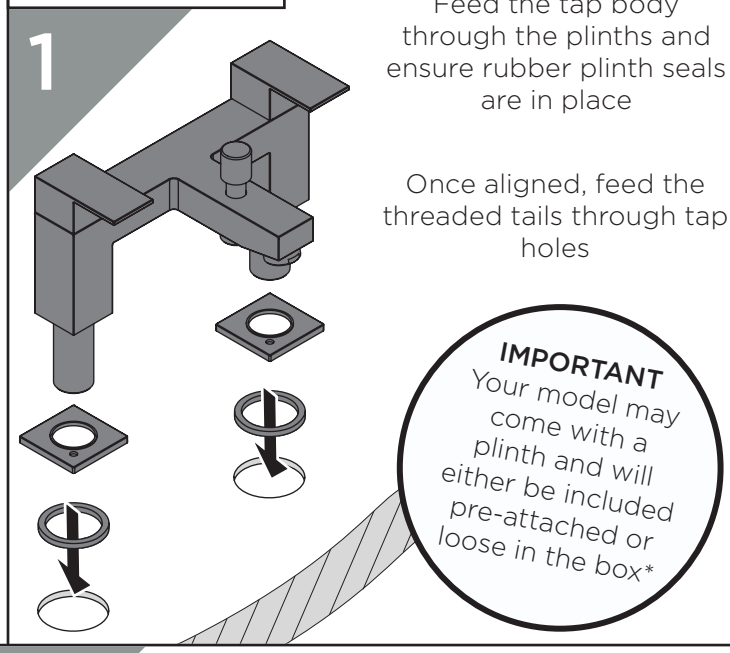

Feed the tap body through the plinths and ensure rubber plinth seals are in place

Once aligned, feed the threaded tails through tap holes

1*

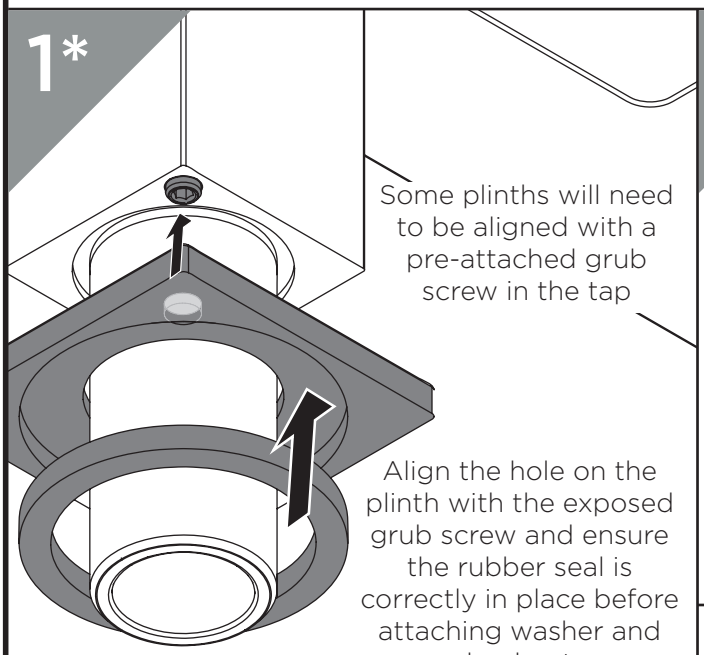

Some plinths will need to be aligned with a pre-attached grub screw in the tap

Align the hole on the plinth with the exposed grub screw and ensure the rubber seal is correctly in place before attaching washer and backnut

2

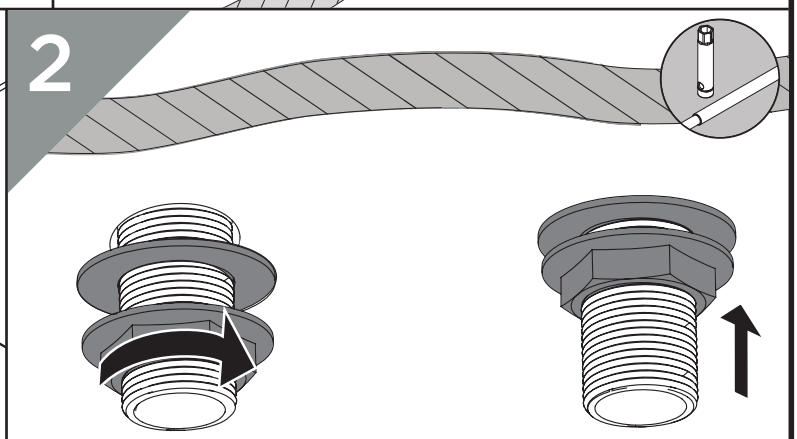

To secure the taps to the bath, use a box spanner to tighten the metal backnuts underneath ensuring the washer is correctly positioned in between the backnuts and the bath

3

Connect the hot and cold water supplies to the threaded tails

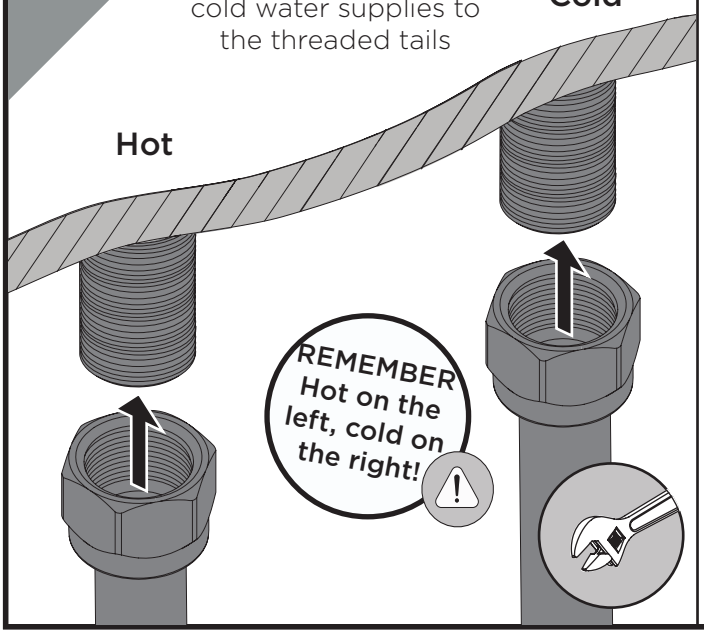

General Cleaning

Bristan products are made from premium materials, with hand polished, electroplated, PVD or EPD finishes.

Your taps or shower should be regularly cleaned with warm water, a mild pH-neutral liquid soap, and polished with a soft cloth. Any residues from soap, toothpaste, shampoos and shower gels can cause blemishes if not rinsed off straight after use.

Household bleaches and cleaners contain harsh chemicals and may damage the surface finish. Avoid using abrasive cloths, scouring pads, scrub sponges, steel wool or anything similar.

Maintenance - Valve Replacement

PLEASE NOTE - Taps shown in these instructions are for illustration purposes only. All taps can be maintained using these instructions.

1

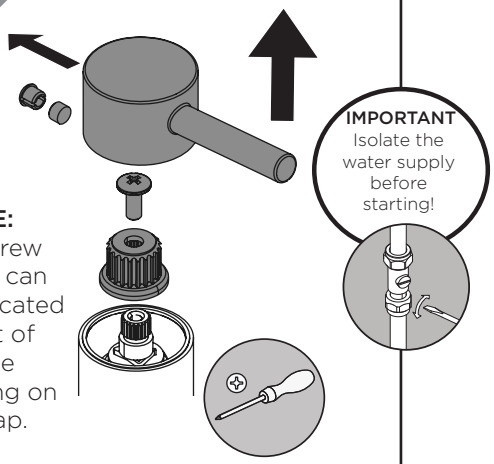

NOTE: Grub screw and cap can also be located at front of handle depending on your tap.

IMPORTANT Isolate the water supply before starting!

Remove the handles depending on the style of your tap, including any spline adaptors if used.

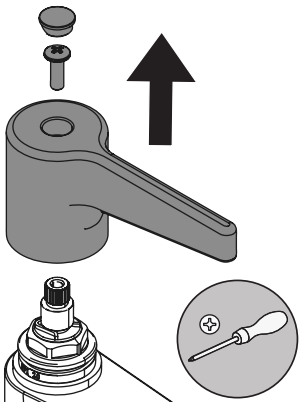

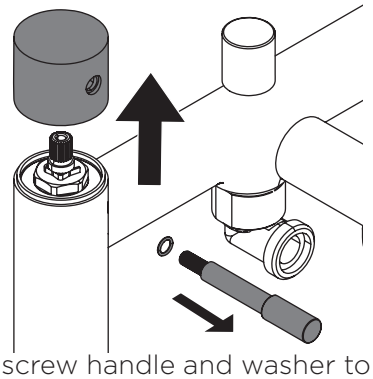

Unscrew handle and washer to remove the handles.

2

Remove the shrouds, screws and spline adaptors if your model has them.

When replacing, ensure valve is fully closed with the handle parallel to the spout.

3

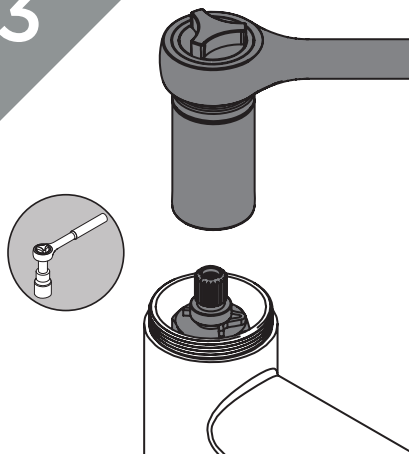

Remove the valve using the tool required for your tap. Check any seals and O-rings for damage. Replace valve if necessary.

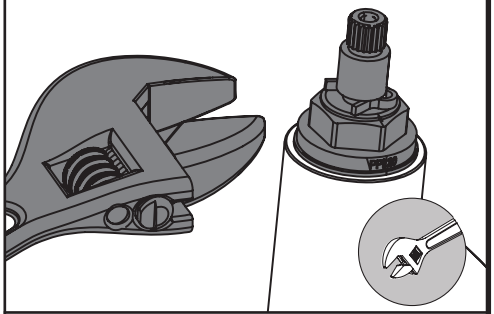

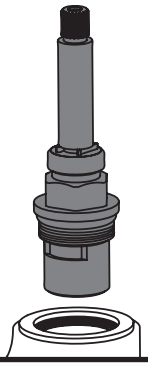

Take care when removing/ replacing your long stemmed valve, as the finish could be damaged or scratched.

Maintenance - Clean/ Replace Outlet

1a Housed Outlet

Using an adjustable spanner, unscrew gently to remove the outlet

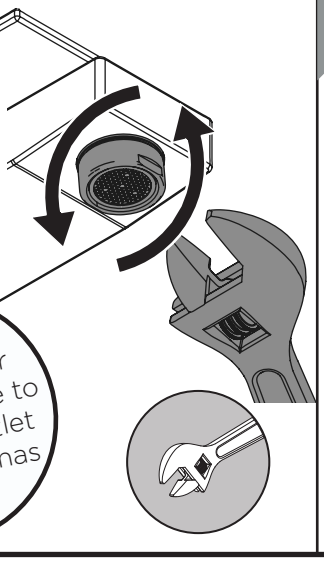

IMPORTANT Refer to your contents page to see what outlet your model has

1b Recessed Outlet

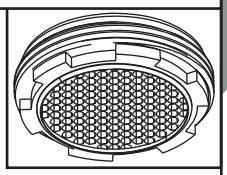

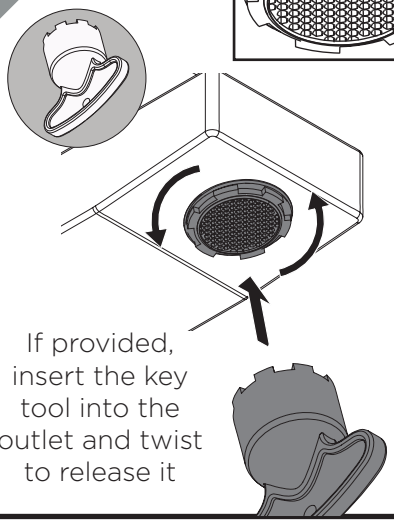

If provided, insert the key tool into the outlet and twist to release it

1c Coin Slot Outlet

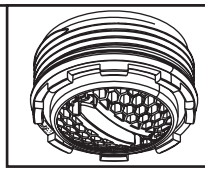

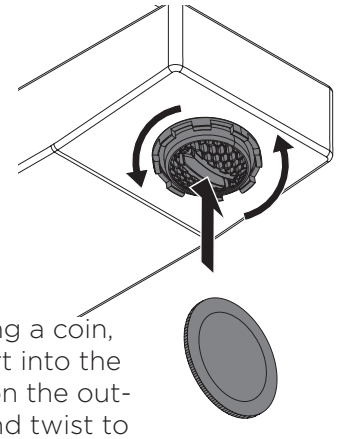

Using a coin, insert into the slot on the outlet and twist to release it

2

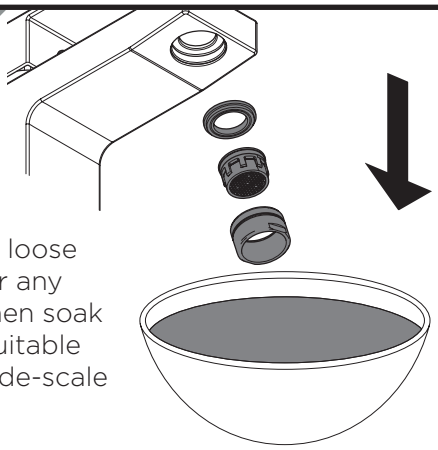

Check all loose parts for any damage, then soak using a suitable solution to de-scale

3

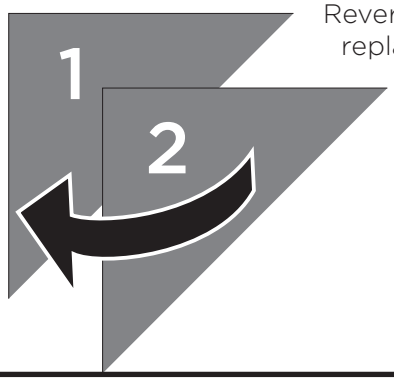

Reverse the steps to replace the outlet

Troubleshooting

Symptom	Cause	Remedy
No flow or low flow rate	Partially closed isolation valve.	Open isolation valve.
	Head of water is below the minimum distance required.	Refer to specification for minimum distance required.
	Hot or cold water being drawn off elsewhere causing pressure changes or instantaneous boiler temperature changes.	Do not use other water outlets when using the taps.
	Airlock or partial blockage in the supply pipework.	Flush through pipework to ensure removal of debris and any airlocks.
Water dripping from taps	This is normal for a short time after using the taps.	This is caused by residual water tension, the build up of water in the tap body.
	If water continues to drip, possibly due to the ceramic disc valves	Remove valves and clean, refer to 'Maintenance' section before starting any maintenance.
Taps do not turn on	Closed isolation valve.	Open isolation valve.
	Mains water supply turned off.	Turn on mains water supply.

UK: Bristan Group, B78 1SG.
Customer Service: +44330 026 6273
Web: www.bristan.com
Email: enquire@bristan.com

EU: FM Mattsson AB (publ)
Box 480
SE-792 27 Mora
Sweden
Email: info@fmmattssongroup.com

For full guarantee terms and conditions visit **www.bristan.com/service-centre/guarantees**