BRISTAN

Installation Instructions & User Guide

Please leave these instructions with the end user

LIS BAS BLK (D4)

Specifications

Dynamic Water Pressure

Min: 0.5 bar **Max:** 5.0 bar

Maximum Static Pressure: 10.0 bar

Inlet Water Temperature

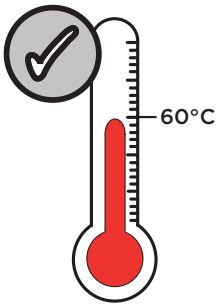

Maximum Hot 60°C

Inlet Connections

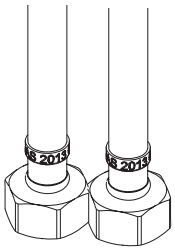

1/2" BSP Flexible Tails

Outlet

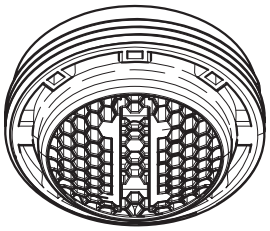

5lpm M24 Aerator

Pack Contents

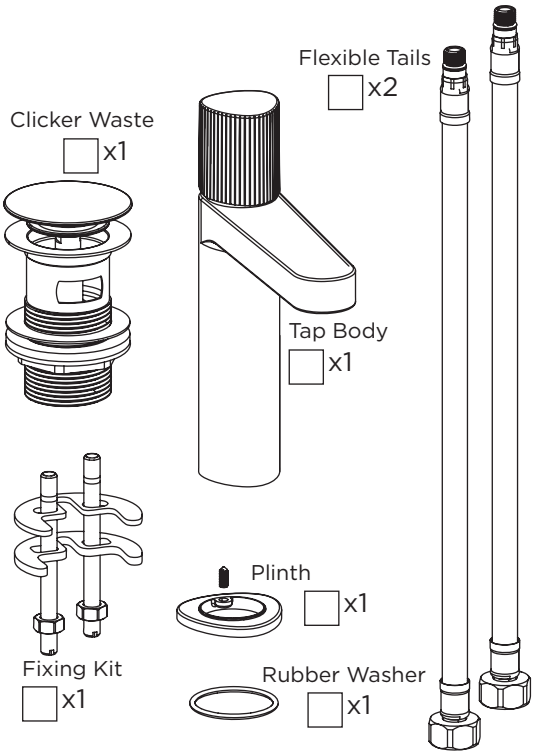

Operation

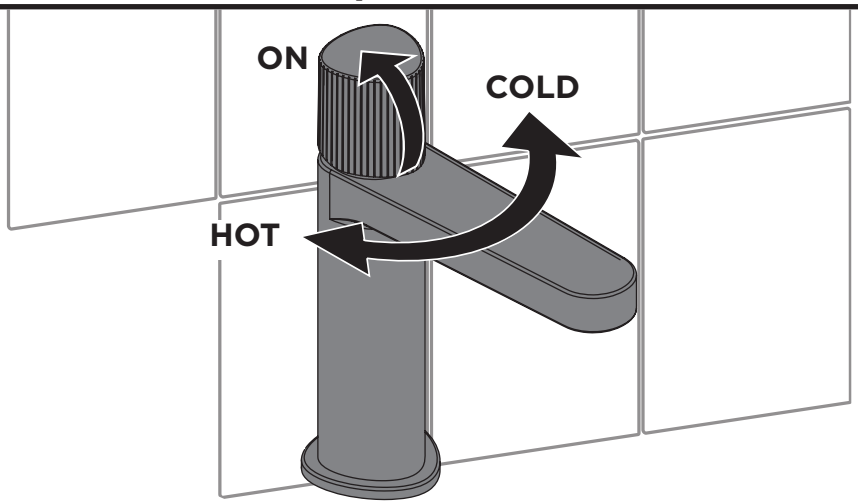

Tools Required for Installation/ Maintenance

22mm Adjustable Spanner

Hexagonal Keys

Flat Head Screwdriver

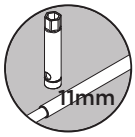

Box Spanner (fixing rod nut)

Prior to Installation

All products manufactured and supplied by Bristan are safe to use provided that they are installed, operated and receive regular maintenance in accordance with these instructions.

This product needs to be installed in accordance with, and meet the requirements of The Water Supply (Water Fittings) Regulations (Northern Ireland) 2009 and The Water Supply (Water Fittings) (Scotland) Byelaws 2014. For full Installation Requirements & Notes (IRN) please visit **www.wrasapprovals.co.uk/approvals-directory**

Isolation valves must be fitted to the inlet water supplies to ensure ease of future maintenance.

Before installing this product the water supply must be thoroughly flushed in order to remove any swarf, solder etc. Full access must be made available for future maintenance/servicing purposes.

This product must not be modified in any way as this will invalidate the guarantee.

Spare Parts

To replace any spare parts for your tap, why not scan the QR Code or visit **www.bristan.com** and search for your product.

Important

The images shown are for illustrative purposes only.
The product you have purchased may look different to those pictured in this booklet but will follow the same installation steps.

Your contents page will be specific to your product.
If you find your product or any of its components differ from those shown on the contents page, please contact our customer support.

1

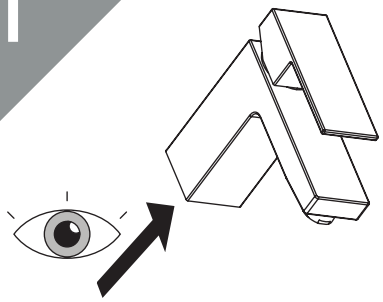

Look underneath the tap body to observe fixing kit rod(s) and tail inlet positions.

Depending on the model, the tap will utilise 1 or 2 fixing kit rods. Refer to your contents page.

1 Fixing Rod

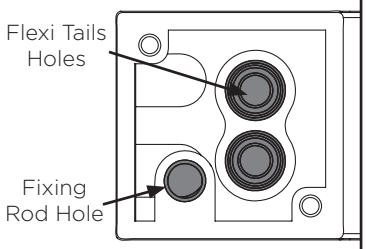

2 Fixing Rods

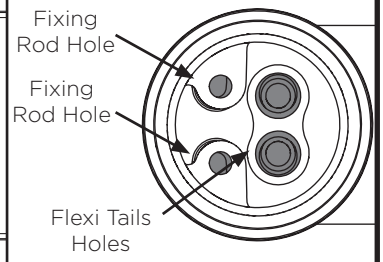

2*

Screw in the fixing kit rod(s) into the base of the tap with a screwdriver.

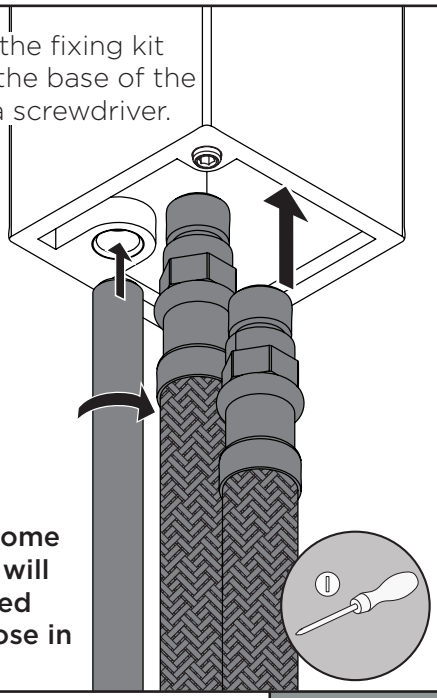

Screw in the flexible tails by hand only.
DO NOT OVERTIGHTEN

Your model may come with a plinth and will either be included pre-attached or loose in the box*

2*

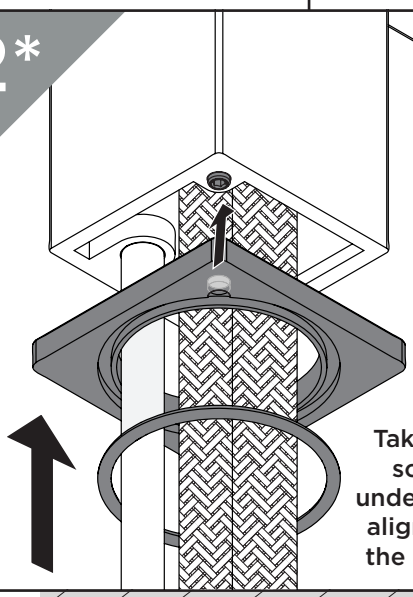

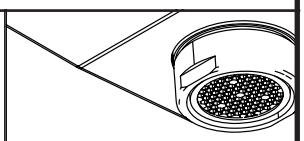

If required, thread the flexible tails and fixing kit rods through the plinth and rubber seal (if loose) and align with tap body.

Take note of any grub screw holes on the underside of the tap and align them correctly to the holes on the plinth.

3

Thread the flexible tails and fixing kit rods through the basin hole.

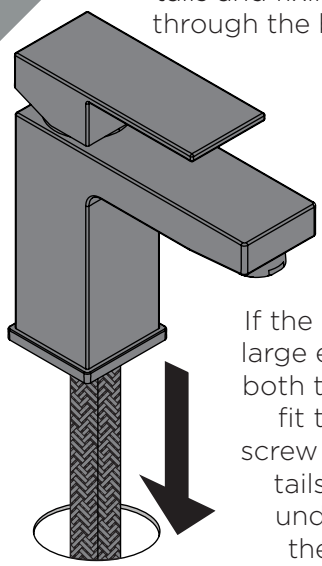

If the hole is not large enough for both tail ends to fit through, screw one of the tails in from underneath the basin.

4

From underneath the basin, slide the rubber gasket and metal c plate along the fixing rod(s) **with the gasket sitting on top of the c plate.**

Align the gasket and c plate with each other and the basin, then begin tightening the nut up the rod towards the basin until secure.

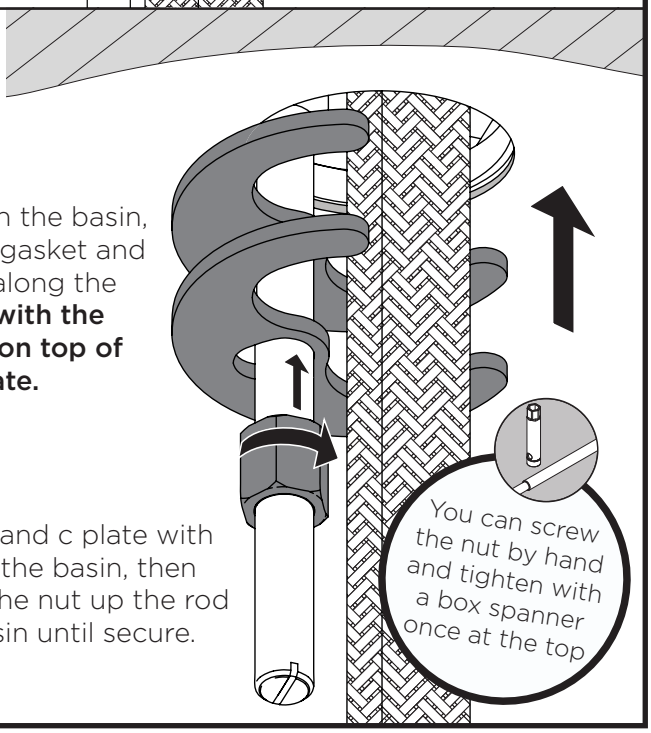

5

Connect the hot and cold water supplies to the flexible tails and turn until tight.

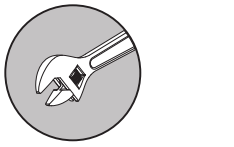

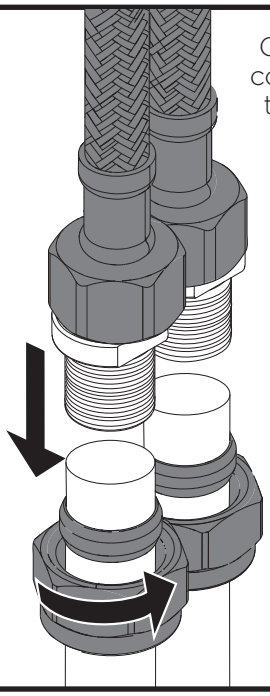

Hot on the left, cold on the right.

REMEMBER
Refer to the next panel for correct flexible tail positions

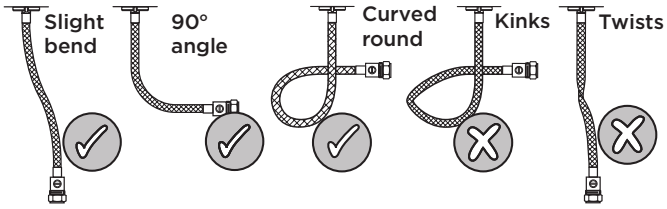

6

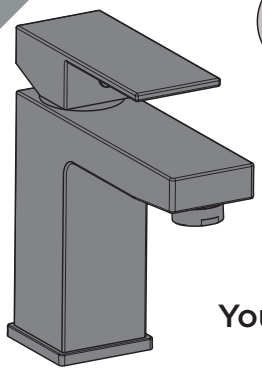

IMPORTANT
Turn on water supply for a few minutes and check all joints and connections for any leaks.

Your tap is now ready for use.

Waste Installation and Operation

1

Fit the waste above the basin ensuring the washer is in place.

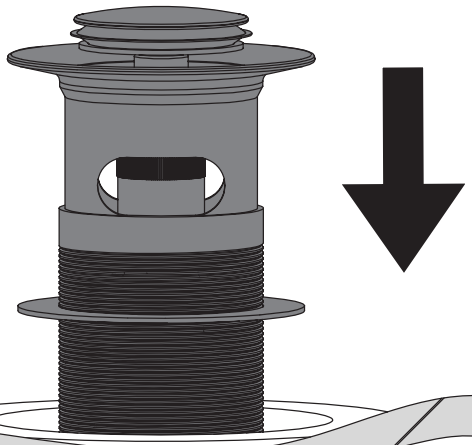

2

Push waste into hole until the outer rim sits flush with the bottom of the basin.

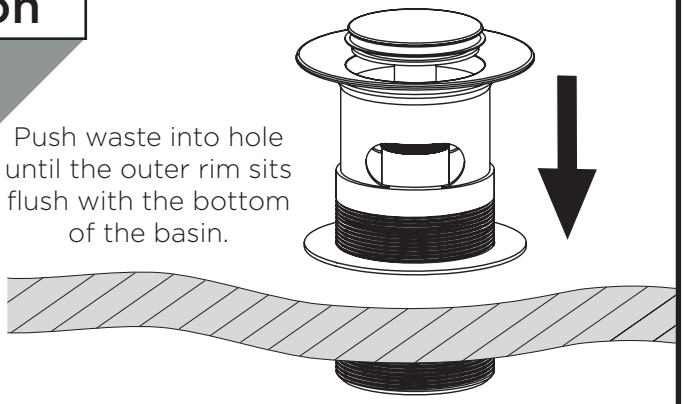

Then place the washer from underneath and tighten the backnut to secure the waste to the basin.

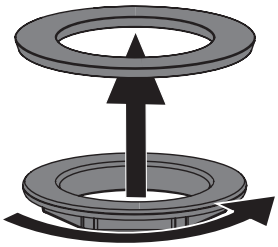

3

Push the centre down to close the waste.

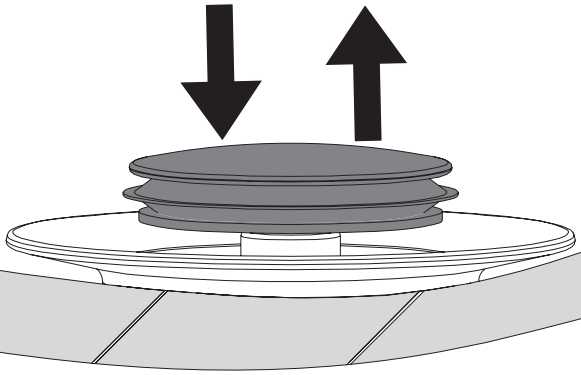

Push again to open and release the contents of the basin.

Your waste is now ready for use.

General Cleaning

Bristan products are made from premium materials, with hand polished, electroplated, PVD or EPD finishes.

Your taps or shower should be regularly cleaned with warm water, a mild pH-neutral liquid soap, and polished with a soft cloth. Any residues from soap, toothpaste, shampoos and shower gels can cause blemishes if not rinsed off straight after use.

Household bleaches and cleaners contain harsh chemicals and may damage the surface finish. Avoid using abrasive cloths, scouring pads, scrub sponges, steel wool or anything similar.

Maintenance - Cartridge/ Valve Replacement

1

Remove indice by pulling it loose, then undo hex grub screw to remove handle.

IMPORTANT
Isolate the water supply before starting!

(Grub screw will be located at the front or rear of the handle)

2

Remove the shroud and retaining nut and then lift the cartridge out of the tap.

(Some shrouds may need to be unscrewed by hand before removing)

3

Reverse the steps to replace the cartridges/ valves and handles.

Maintenance - Clean/ Replace Outlet

Refer to your contents page to identify outlet type

BRISTAN

1a Housed Outlet

Using an adjustable spanner, unscrew gently to remove the outlet.

1b Recessed Outlet

If provided, insert the key tool into the outlet and twist to release it.

1c Coin Slot Outlet

Using a coin, insert into the slot on the outlet and twist to release it.

2

Check all loose parts for any damage, then soak using a suitable solution to de-scale.

3

Reverse the steps to replace the outlet.

Troubleshooting

Symptom	Cause	Remedy
Low Flow	Partially closed isolation valve.	Open isolation valve.
	Airlock or partial blockage in the supply pipework.	Flush through pipework to ensure removal of debris and any airlocks.
	Partial blockage in the outlet	Remove to Clean and soak in suitable solution.
No hot water or cycling hot and cold	Instantaneous water heater cycles on and off as flow rate or pressure is too low.	Increase water flow rate or pressure through system.
No Flow	Closed isolation valve.	Open isolation valve.
	Mains water supply turned off.	Turn on mains water supply.
Temperatures not corresponding with taps	Inlet pipes have been connected incorrectly	Swap the inlet tails around.

Notes

Please use this space for any notes you or your installer may have regarding the installation/plumbing of this product.

UK: Bristan Group, B78 1SG.
Customer Service: +44330 026 6273
Web: www.bristan.com
Email: enquire@bristan.com

EU: FM Mattsson AB (publ)
Box 480
SE-792 27 Mora
Sweden
Email: info@fmmattssongroup.com

Servicing Your Tap

We recommend servicing your tap at least once every year to prolong its life.

To see a video showing how to remove the cartridge for servicing, scan the QR code with your smart phone or tablet.

Alternatively visit **www.youtube.com/BristanTV**

Our Guarantee

At Bristan, we want to make things as easy as possible for our customers. That's why we offer solid guarantees on all our products, effective from the date of purchase, to give you peace of mind.

Your guarantee starts from the purchase of your product, but you can still benefit from registering it for easier identification in the unlikely event of a manufacturing fault, please visit **www.bristan.com/register**

For any other queries, please call Customer Service on 0330 026 6273 where our expert team of advisors will be able to offer you any help and advice.

For full guarantee terms and conditions visit **www.bristan.com/service-centre/guarantees**