# BRISTAN

## Installation Instructions & User Guide

**Please leave these instructions with the end user**

**Product Code: MOL SHCDIV Range (D3)**

## Specifications

### Dynamic Water Pressure

**Min:** 0.2 bar **Max:** 5.0 bar

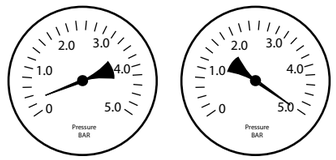


**Maximum Static Pressure:** 10.0 bar

### Inlet Water Temperature

**Cold Water Supply**

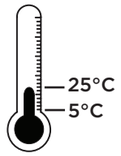


**Min:** 5°C **Max:** 25°C

**Hot Water Supply**

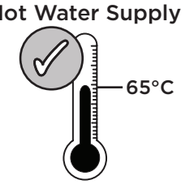


**65°C Recommended**

**IMPORTANT** The inlet hot water must be at least 10°C above the required blend temperature.

### Inlet Dimensions

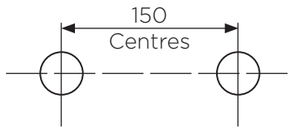


### Inlet Connections

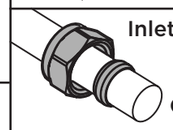

**15mm Compression**

Socket Spanner | Cross Head Screwdriver | Drill | Adjustable Spanner | Pipe Cutter | Silicon Sealant | Hexagonal Keys | Pipe & Wire Detector | Spirit Level

## Prior to Installation

All products manufactured and supplied by Bristan are safe to use provided that they are installed, operated and receive regular maintenance in accordance with these instructions.

This product needs to be installed in accordance with, and meet the requirements of the Water Supply (Water Fittings) Regulations 1999 and current by-laws. For full Installation Requirements & Notes (IRN) please visit **wras.co.uk/directory.**

Isolation valves must be fitted to the inlet water supplies to ensure ease of future maintenance. Before installing this product the water supply must be thoroughly flushed in order to remove any swarf, solder etc. Full access must be made available for future maintenance/ servicing purposes.

Before drilling into walls, check that there are no hidden electrical wires, cables or water supply pipes. This can be checked with the aid of an electronic detector.

If power tools are used do not forget to:
- Wear eye protection
- Unplug equipment after use

This product must not be modified in any way as this will invalidate the guarantee.

If in doubt, contact a registered plumber, your Local Water Authority or the Secretary of the Institute of Plumbing, address as follows:-

The Institute of Plumbing,
64 Station Lane,
Hornchurch,
Essex,
RM12 6NB, Tel: 01708 472791

### Cavity Dimensions (mm)

**Minimum Fitting Depth:** 60mm

**Maximum Fitting Depth:** 75mm

**Concealing Plate Adjustment Range:** 15mm

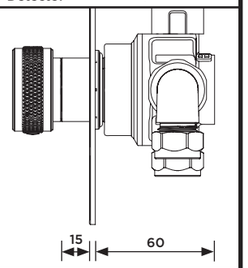


## Pack Contents

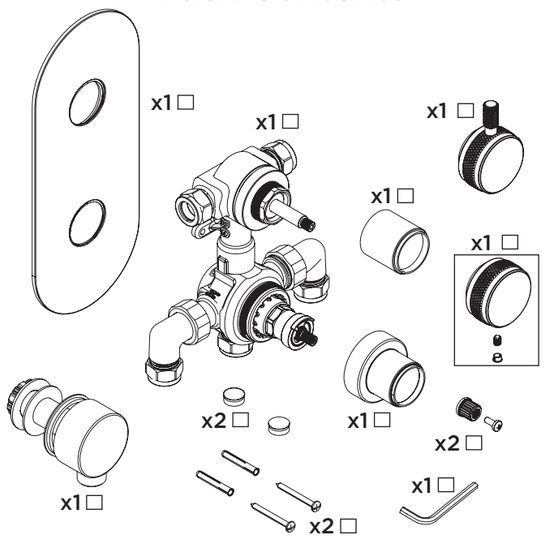


## Valve Configuration

**1**

**IMPORTANT** If installed in conjunction with a combination boiler flow regulators **must** be fitted.

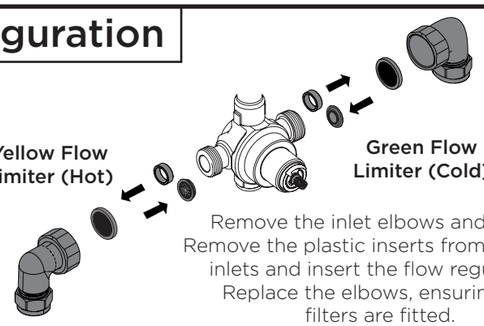


Remove the inlet elbows and filters. Remove the plastic inserts from the valve inlets and insert the flow regulators. Replace the elbows, ensuring the filters are fitted.

**2**

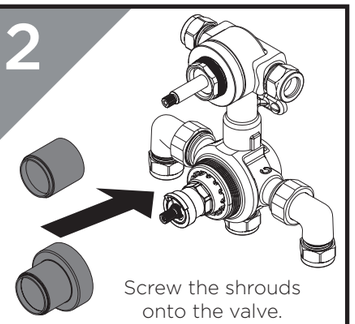

Screw the shrouds onto the valve.

## Installation

**1**

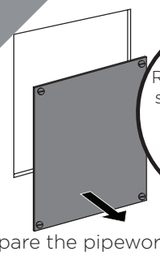

Prepare the pipework. Create the rear access point in the back of the wall cavity.

**2**

**IMPORTANT** Rear access to the shower is required for maintenance and servicing of elbows and filters.

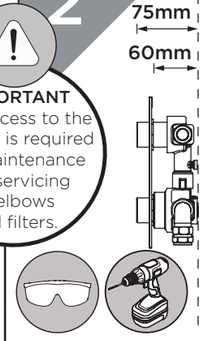


Install suitable batons (if required) into the cavity. Take the finished wall surface into consideration when fitting the valve into the cavity. Mark the position of the valve; drill and plug holes to suit.

**3**

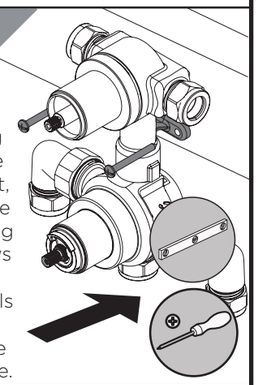

Ensuring the valve is straight, secure the valve using the screws supplied (solid walls only) or a suitable alternative.

**4**

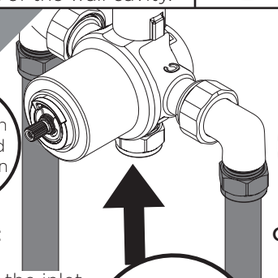

Elbows can be pointed up or down

**Hot** **Cold**

Connect the inlet pipes ensuring the olives are fitted.

**REMEMBER** hot on the left, cold on the right

**5**

**IMPORTANT** Outlets can be fitted on the left and right side only.

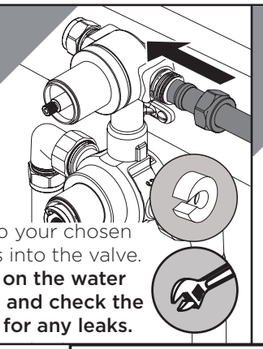

Plumb your chosen outlets into the valve. **Turn on the water supply and check the valve for any leaks.**

**6**

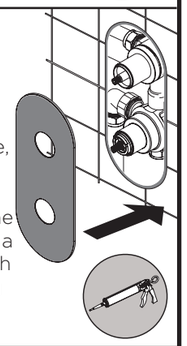

Draw around the concealing plate as a template, measuring in by 10mm to give clearance. Finish the wall surface. Using a silicon sealant, push on the concealing plate and hold firmly until set.

**7**

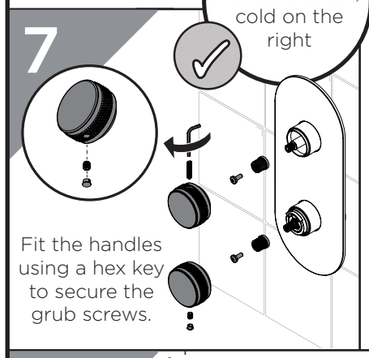

Fit the handles using a hex key to secure the grub screws.

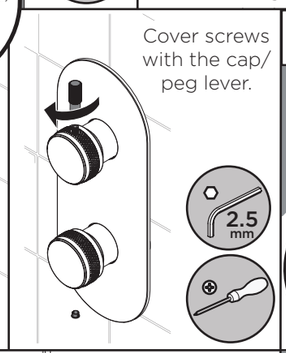


Cover screws with the cap/ peg lever.

## Temperature Adjustment

**1**

Turn the handle to the maximum temperature setting, then remove it.

**REMEMBER** To service your product!

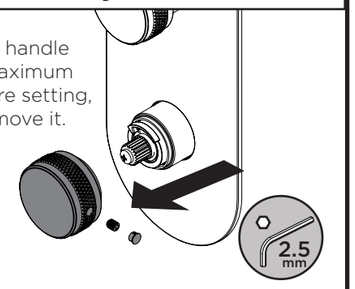


**2**

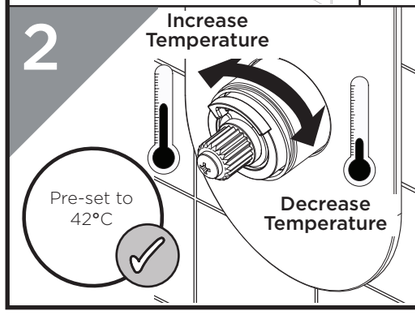


Pre-set to 42°C

Turn the spindle to increase or decrease the temperature. Check the temperature and adjust until you achieve the desired result.

**3**

Fit the temperature handle back in the maximum hot position.

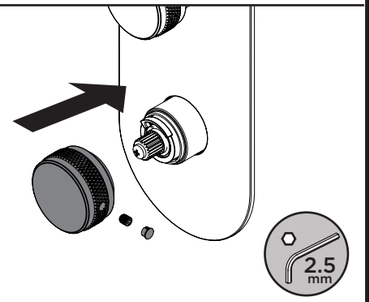

## General Cleaning

Bristan products are made from premium materials, with hand polished, PVD, EPD or electroplated finishes.

Your shower should be regularly cleaned with warm water, a mild pH-neutral liquid soap, and polished with a soft cloth. Any residues from soap, toothpaste, shampoos and shower gels can cause blemishes if not rinsed off straight after use.

Household bleaches and cleaners contain harsh chemicals and may damage the surface finish. Avoid using abrasive cloths, scouring pads, scrub sponges, steel wool or anything similar.

## Operation

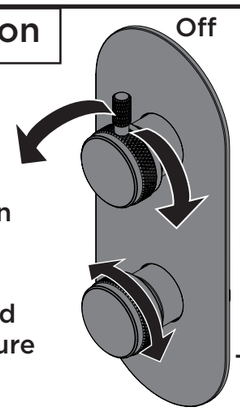


## Wall Outlet Installation

Choose the location for the wall outlet and create a 25-30mm hole in the wall. Ensure your shower accessories have enough reach from that position. Finish the wall surface.

### With rear access

Fit the wall outlet, ensuring the washers are fitted either side of the wall.

Go to Step 5 in the Installation Steps.

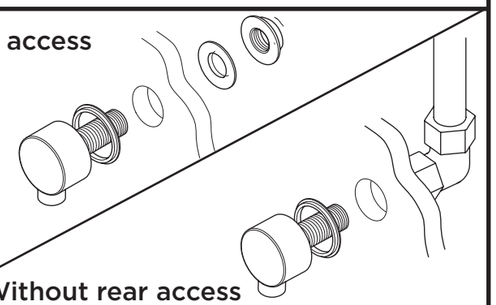

### Without rear access

Follow Step 5 in the Installation Steps, fitting a 1/2" female connection at the hole in the wall (not supplied).

Screw the wall outlet into the 1/2" female connection, using a suitable thread sealant ensuring the rubber seal is fitted to the back of the wall outlet.

## Servicing Intervals

To reduce the build up of lime scale and to ensure this shower works to its maximum performance we recommend this shower is serviced every 6-12 months depending on the hardness of your water.

## Maintenance - Cartridge Cleaning

**1**

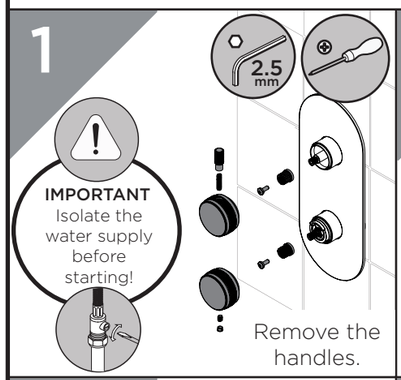


Remove the handles.

**2**

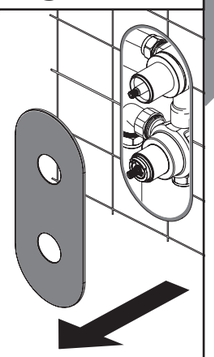

Gently remove the concealing plate from the wall.

**3**

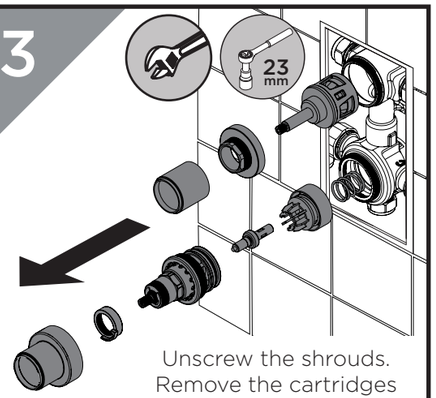


Unscrew the shrouds. Remove the cartridges and piston.

**4**

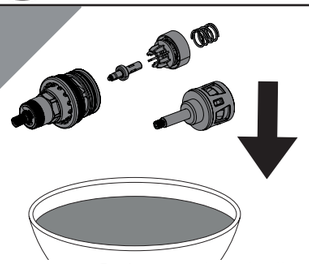

Remove any O-rings and soak all components in de-scaler and wash off in clean water. Examine all seals and replace if needed. Use WRAS approved silicon based grease on all seals.

**5**

Reverse the installation steps, ensuring the temperature stop is aligned correctly.

**6**

Follow the Temperature Adjustment Steps if required.

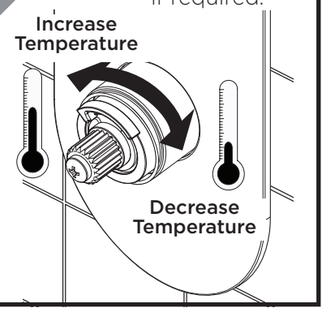


## Troubleshooting

| Symptom | Cause | Remedy |
|---|---|---|
| No flow or low flow rate | Partially closed isolation valve. | Open isolation valve. |
| | Instantaneous water heater cycles on and off as flow rate or pressure is too low. | Increase water flow rate or pressure through system. |
| | Head of water is below the minimum distance required. | Refer to the specification for the minimum distance required. |
| | Are the water supply pressures balanced? | If pressures are unbalanced, a pressure reducing valve should be used for optimum performance. |
| | Hot or cold water being drawn off elsewhere causing pressure changes or instantaneous boiler temperature changes. | Do not use other water outlets when using the shower. |
| | Airlock or partial blockage in the supply pipework. | Flush through pipework and filters to ensure removal of debris and any airlocks. |
| | Hot/Cold water supply has failed | Check the hot and cold feeds. The shower will not work if either fails. |
| Maximum Water Temperature too Hot/Cold | Maximum Water Temperature needs adjusting. | Refer to the Temperature Setting section to set your desired maximum temperature. |
| Outlet Water Temperature too Hot/Cold | Filter/pipe blockage | Flush through pipework and filters to ensure removal of debris and any airlocks. |
| | Installtion conditions outside operating parameters. | Refer to the specification for the minimum distance required. |
| | Hot water temperature is less than 10°C above the required blend temperature | Adjust hot water temperature or wait for water to reheat if a stored water system is used. |
| | Instantaneous water not igniting because the water flow rate is too low. | Increase water flow rate through the system. Refer to the Maintenance section to clean/check the cartridge and filters for any damage. Contact your boiler manufacturer. |
| | Instantaneous water not igniting because the water pressure is too low. | Refer to the specification for system requirements. Increase water pressure through the system. Contact your boiler manufacturer. |
| Only hot/ cold water from Shower Valve | Inlet water supplies are reversed. | Check the water inlet connections are the correct way around: Hot on the left, Cold on the right when viewed from the front. Rework pipework as necessary. |
| | Filter/pipe blockage | Flush through pipework and filters to ensure removal of debris and any airlocks. |
| Water dripping from shower | This is normal for a short time after using the shower. | This is caused by residual water tension, the build up of water in the shower. |
| | If water continues to drip, possibly due to the cartridge | Remove cartridge and clean, refer to 'Maintenance' section before starting any maintenance. |
| Shower does not turn on | Closed isolation valve. | Open isolation valve. |
| | Mains water supply turned off. | Turn on mains water supply. |

## Our Guarantee

At Bristan, we want to make things as easy as possible for our customers. That's why we offer solid guarantees on all our products, effective from the date of purchase, to give you peace of mind.

To start your free guarantee simply scan the QR code and register your product. Alternatively visit **www.bristan.com/register.**


**UK: Bristan Group, B78 1SG.**
Customer Service: +44330 026 6273
Web: www.bristan.com
Email: enquire@bristan.com

**EU: FM Mattsson AB (publ)**
Box 480
SE-792 27 Mora
Sweden
Email: info@fmmattssongroup.com


**arantees**.

026 6273
an.com
ristan.com

BRISTAN

# BRISTAN

# Installation Instructions & User Guide

**Please leave these instructions with the end user**

RND KIT01 C (D4)

## Specifications

### Dynamic Water Pressure

**Min:** 0.2 bar **Max:** 5.0 bar

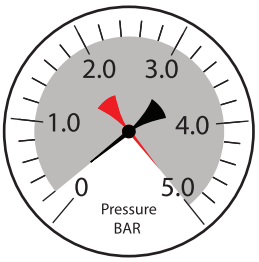


**Maximum Static Pressure:** 10.0 bar

## Tools Required

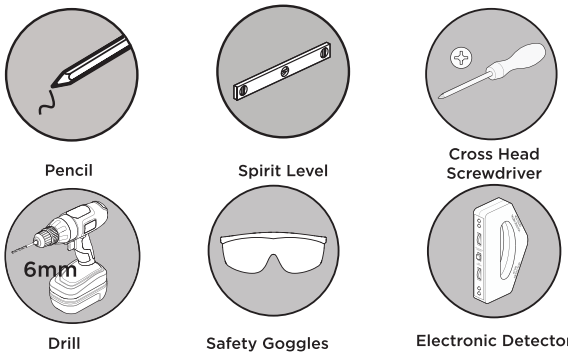


### Inlet Connections

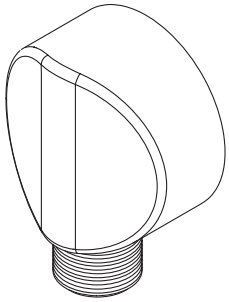

1/2" BSP

## Pack Contents

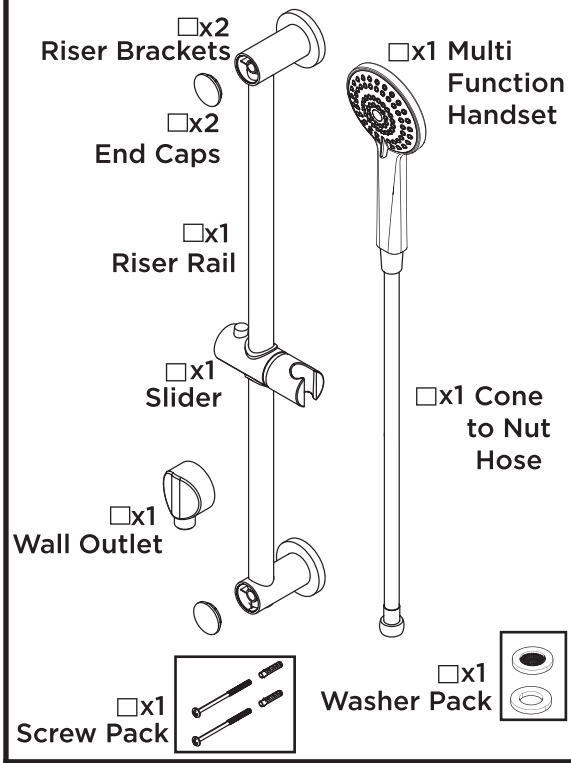


## Operation

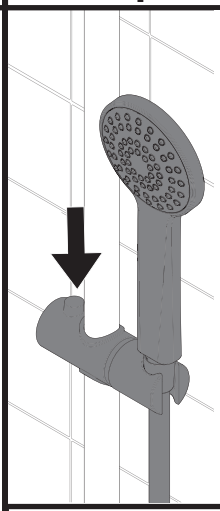

Press the button to release the lock.

Adjust to the necessary height and release the button to lock.

## Spares

To replace any spare parts for your shower, why not scan the QR Code or visit **www.bristan.com** and search for your product.

## Dimensions (mm)

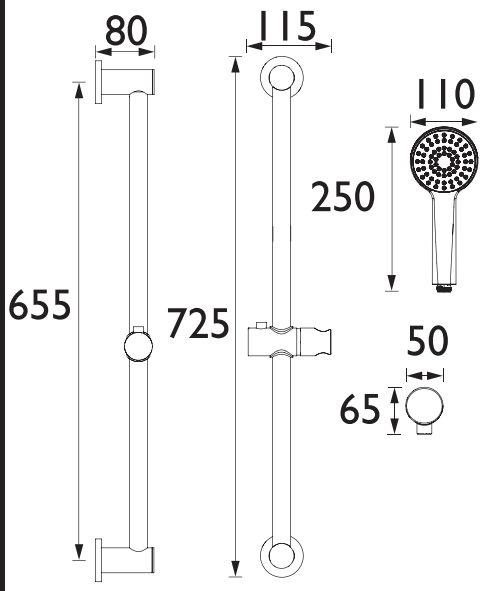


## Prior to Installation

All products manufactured and supplied by Bristan are safe to use provided that they are installed, operated and receive regular maintenance in accordance with these instructions.

This product needs to be installed in accordance with, and meet the requirements of The Water Supply (Water Fittings) Regulations (Northern Ireland) 2009 and The Water Supply (Water Fittings) (Scotland) Byelaws 2014. For full Installation Requirements & Notes (IRN) please visit **www.wrasapprovals.co.uk/approvals-directory**

Full access must be made available for future maintenance/servicing purposes. This product must not be modified in any way as this will invalidate the guarantee.

Before drilling into walls, check that there are no hidden electrical wires, cables or water supply pipes.
This can be checked with the aid of an electronic detector. If power tools are used do not forget to:
- Wear eye protection
- Unplug equipment after use

BRISTAN

# Installation Instructions and User Guide

Adjustable Riser Kits

**Please keep this booklet for future reference.**

**Installer, when you have read these instructions please ensure you leave them with the user.**

# Contents

Thank you for choosing Bristan, the UK's leading taps and showers expert. We have designed these products with your enjoyment in mind. To ensure that they work to their full potential, they need to be fitted correctly. These fitting instructions have been created to give you all of the information you need and, if you need any further help, please do not hesitate to give us a call on 0330 026 6273.

## Contents


- Important Safety Information **3**
- Prior to Installation **4**
- Installation - Riser with Moulded Brackets **5-6**
- Installation - Brackets with Fixing Plates **6-7**
- Installation - Shrouded Brackets **8**
- Installation - Wall Outlets **9**
- General Cleaning **9**
- Troubleshooting **10**
- Notes **11**

# Important Safety Information

All products manufactured and supplied by Bristan are safe to use provided that they are installed, operated and receive regular maintenance in accordance with these instructions.

This product needs to be installed in accordance with, and meet the requirements of the Water Supply (Water Fittings) Regulations 1999 and current by-laws.
For full Installation Requirements & Notes (IRN) please visit
**www.wrasapprovals.co.uk/approvals-directory**

This product must not be modified in any way as this will invalidate the guarantee.

Full access must be made available for future maintenance/servicing purposes.

Before drilling into walls, check that there are no hidden electrical wires, cables or water supply pipes. This can be checked with the aid of an electronic detector.

If power tools are used do not forget to:

- Wear eye protection

- Unplug equipment after use

If in doubt, contact a registered plumber or your Local Water Authority or the Secretary of the Institute of Plumbing, address as follows:-

The Institute of Plumbing,
64 Station Lane,
Hornchurch,
Essex,
RM12 6NB, Tel: 01708 472791

# Prior to Installation

The installation images are for illustrative purposes only, and your product may slightly differ in installation, depending on specification. Please refer to your specific shower kit contents page for specification information.

These kits are designed to be used in conjunction with Bristan showers. We cannot guarantee compatability or adequate performance when used with other showers.

This shower kit must be installed in compliance with current water regulations. If you have any doubts about the water regulation requirements contact your local water services provider or use the services of a professional plumber.

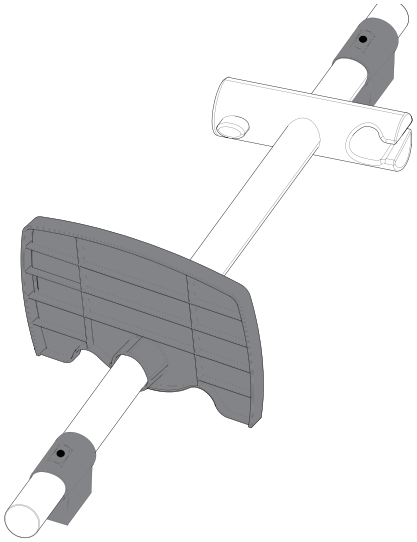

Check to see which type of brackets your adjustable riser has. This information will be needed to follow the correct installation steps.

Some of our adjustable riser kits have adjustable brackets to help cover existing fixing holes. Check to see if your brackets have a hole that goes all the way through the bracket.

You will also need to check that the riser rail has holes/notches in the rail. These holes/notches signify a fixed point where the bracket will need to be.

**Bracket Types:**

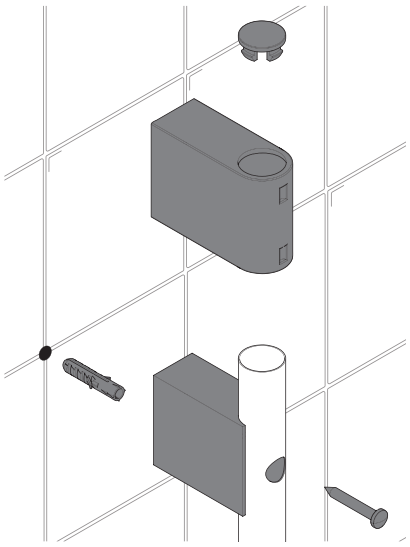

**Shrouded Bracket**

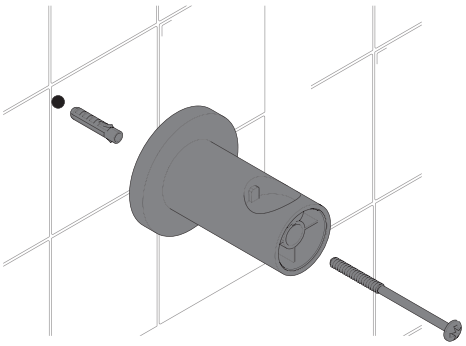

**Moulded Bracket**

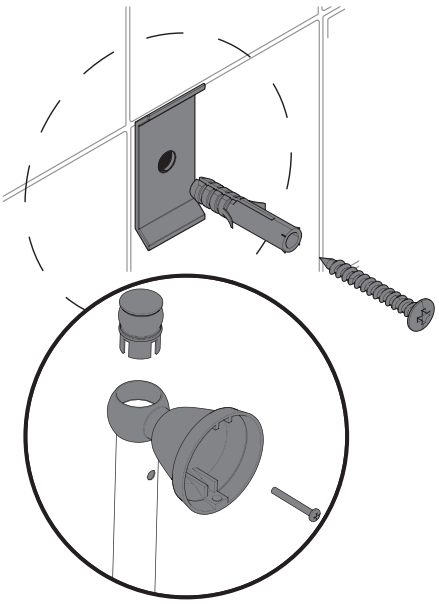

**Fixing Plate Bracket**

# Installation - Riser with Moulded Brackets

## 1a

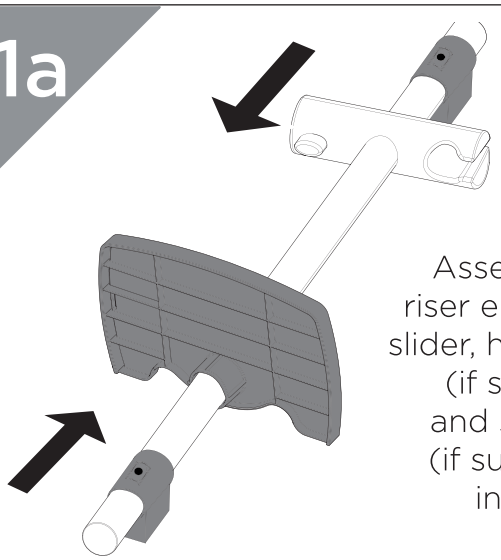

Assemble the riser ensuring the slider, hose retainer (if supplied) and soap dish (if supplied) is in place.

## 1b

If your brackets come with internal fixings, make sure that the internal fixings inside the bracket are in place when attaching to the riser rail.

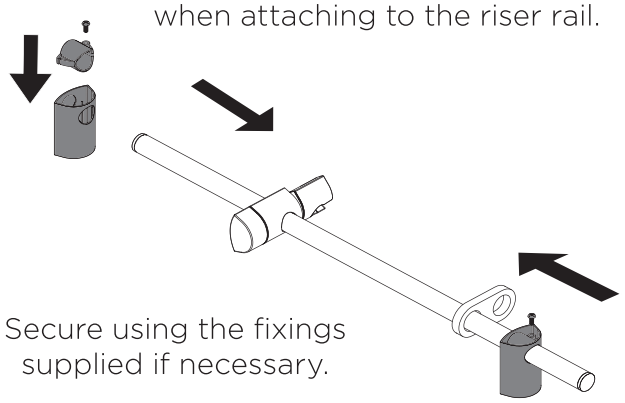

Secure using the fixings supplied if necessary.

## 2a

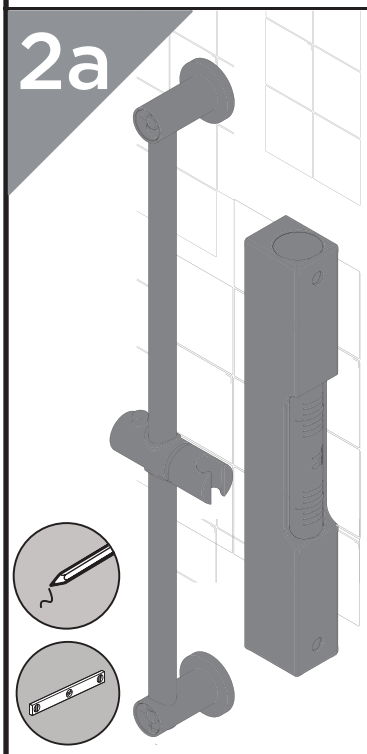

Using a spirit level to ensure the riser is positioned correctly and vertical, use the assembled riser to mark the desired position of the brackets and wall fixings. Make sure to accommodate for all user heights.

## 2b

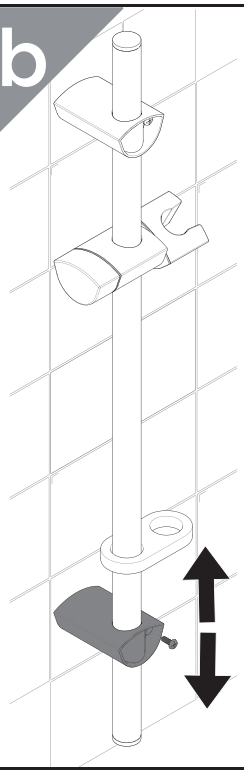

If your kit brackets are adjustable, slide the bottom bracket to the desired position to cover existing holes. If internal fixings are used in the brackets, you may need to loosen the fixings and re-tighten once in the desired position.

## 3

Mark and drill the screw holes. Secure the bottom bracket to the wall. Check for a notch/hole in the riser rail; fixings may have to go through the hole to secure the bracket or it may have to be orientated to fit in a certain position.

**REMEMBER**

*Check for hidden pipes and cables before drilling!*

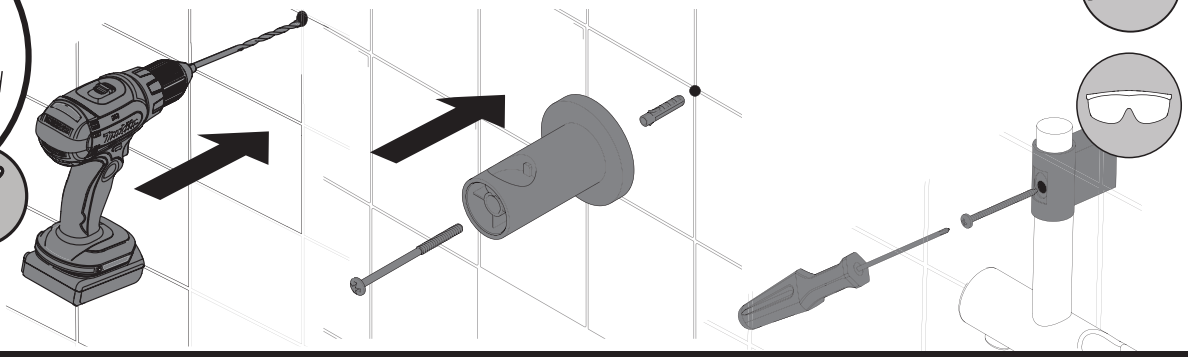

# Installation - Riser with Moulded Brackets

4

Place or slide the riser and top bracket into the bottom bracket. Secure the riser rail to the wall using the fixings supplied.

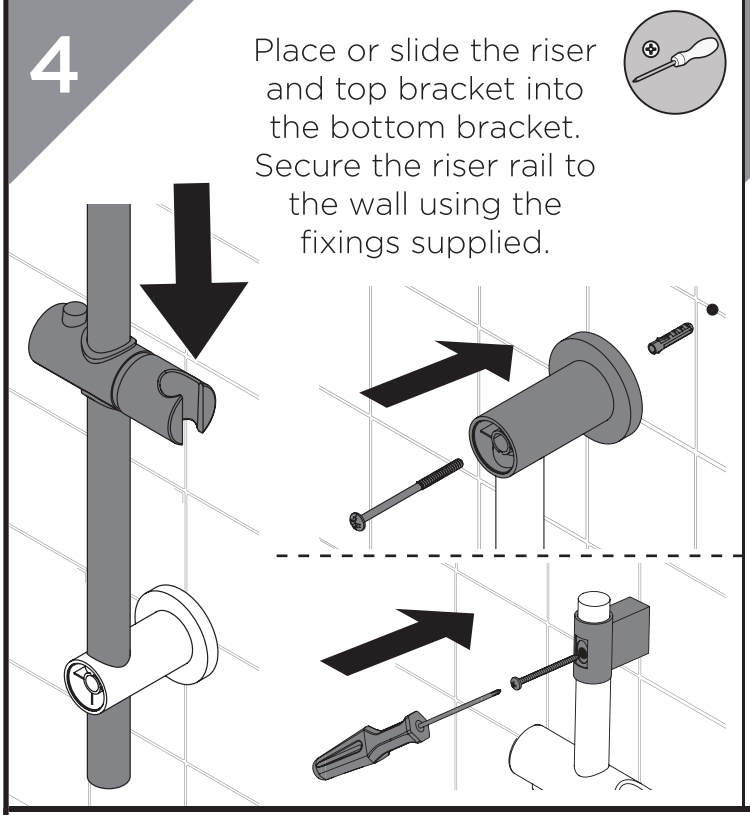

5

Place the caps on to the riser rail.

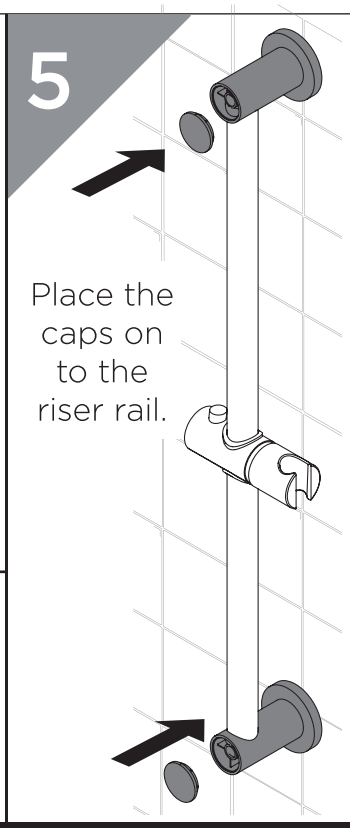

6

Connect the hose and handset to your shower, ensuring the washers are in place (if supplied). If a hose retainer or soap dish is supplied, make sure the hose is fed through it.

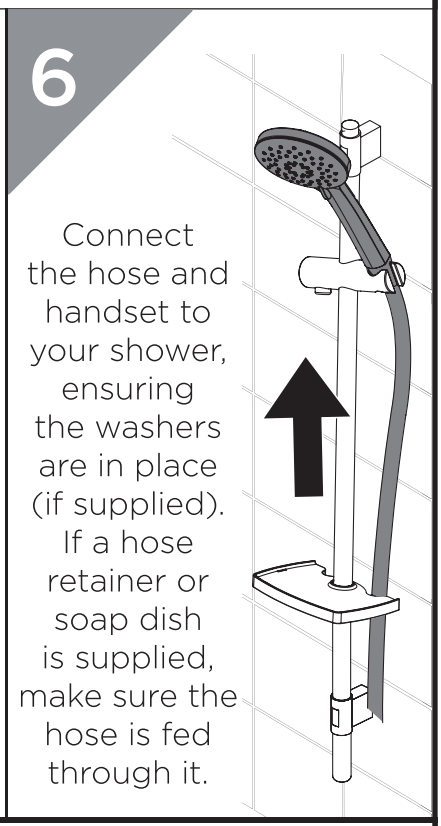

# Installation - Brackets with Fixing Plates

1

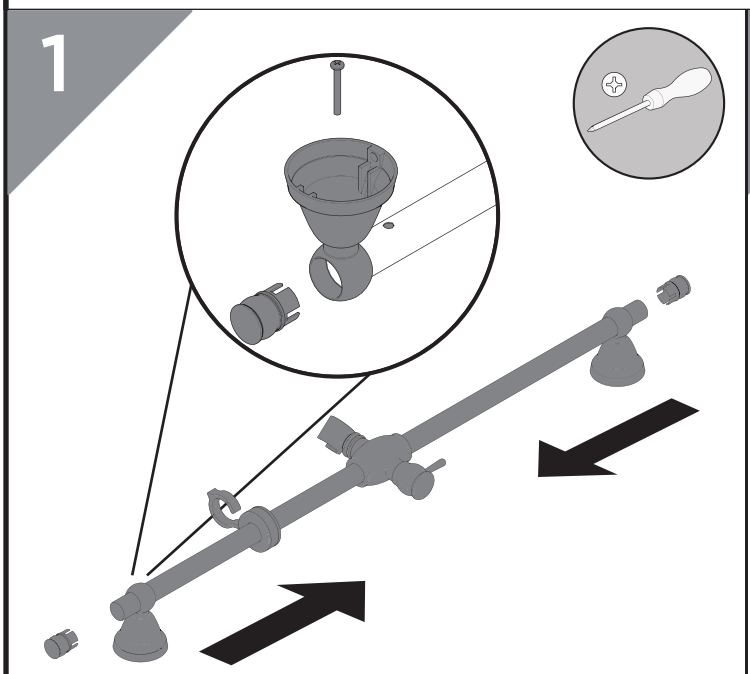

Assemble the riser ensuring the slider, hose retainer (if supplied) and soap dish (if supplied) are in place. If necessary, secure the brackets to the riser rail using the supplied fixings.

2a

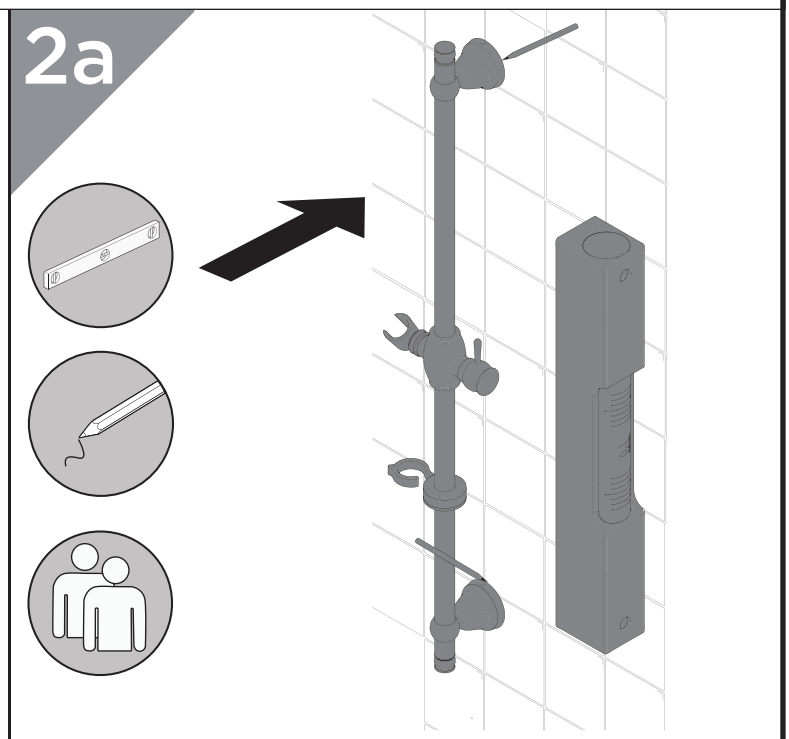

Position the riser rail, taking into account user heights and that the hose can reach the shower outlet with the handset in the holder. Check the rail is straight and mark the bracket positions.

 **Need help? Give us a call on 0330 026 6273 and speak to one of our trained advisors.**

# Installation - Brackets with Fixing Plates

## 2b

If your kit brackets are adjustable, loosen the fixings to slide the bottom bracket to the desired position. Re-tighten once in the desired position. Check the rail is straight and mark the bracket positions.

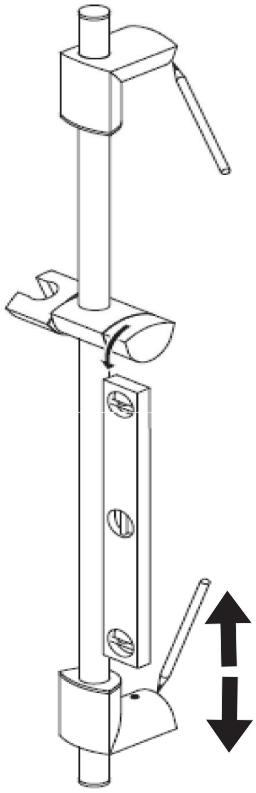

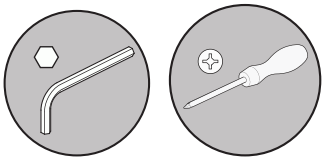

## 3

Remove the fixing plates by unscrewing the fixings or sliding from the fixing brackets.

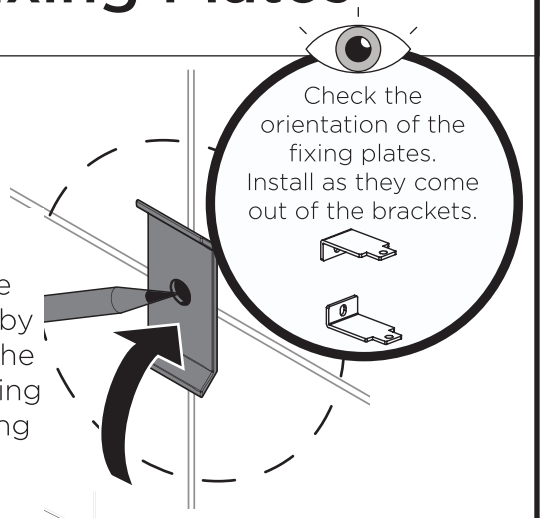


Mark the fixing holes in each bracket position and drill.

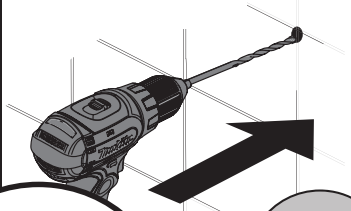

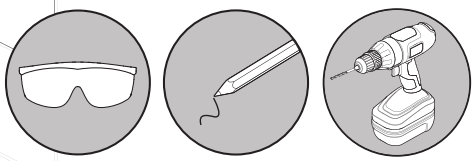

**REMEMBER**
Check for hidden pipes and cables before drilling!

## 4

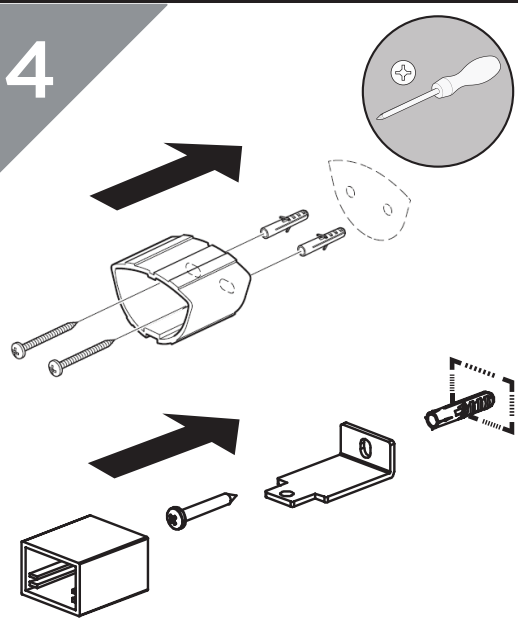

Secure the fixing plates to the wall using the fixings supplied. Use the wall plugs if necessary for your wall type. If you are fitting the riser to a partition wall or a wall of particularly soft friable substrate, you will need appropriate fixings for the wall type. If necessary, slide the bracket shrouds back on to the fixing plates.

## 5

Attach the riser to the fixing plates and secure using the fixings supplied. If necessary, place the caps on to the riser rail.

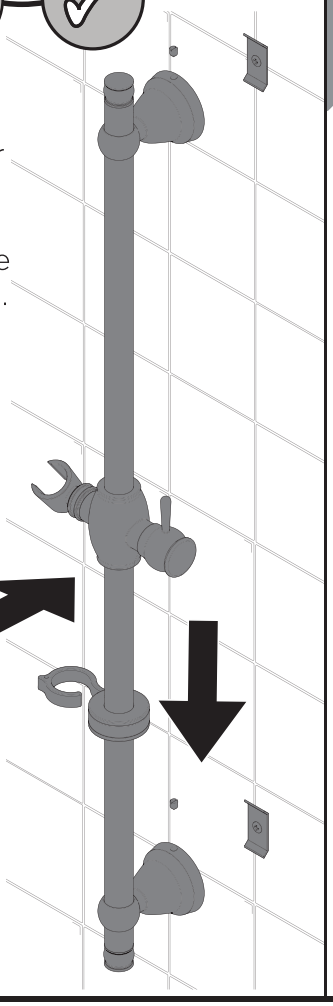

## 6

Connect the hose and handset to your shower, ensuring the washers are in place (if supplied). If a hose retainer or soap dish is supplied, make sure the hose is fed through it.

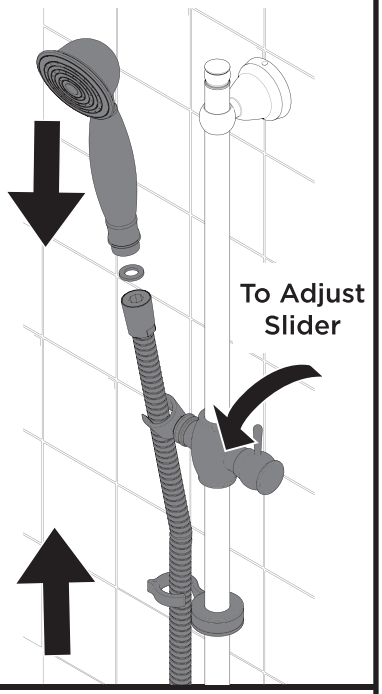

# Installation - Shrouded Brackets

1

Slide the slider, bracket covers and caps on to the riser rail.

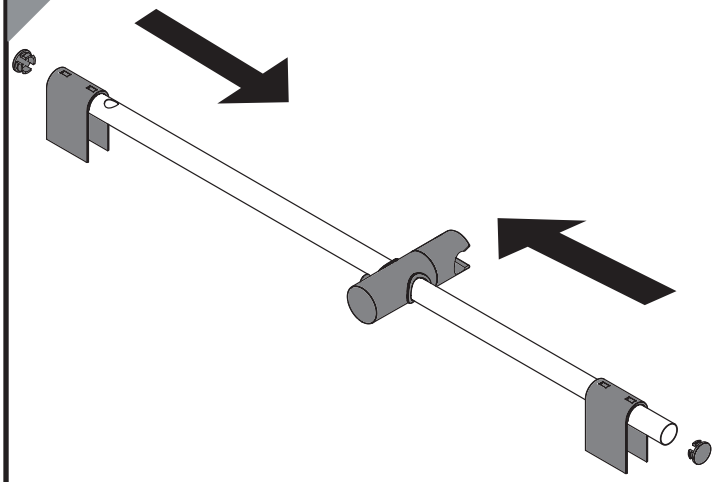

2

Ensure the riser rail is straight and mark the fixing hole positions on the wall.

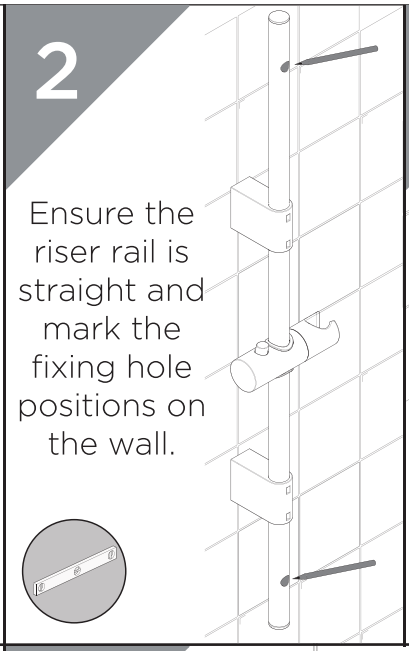

3

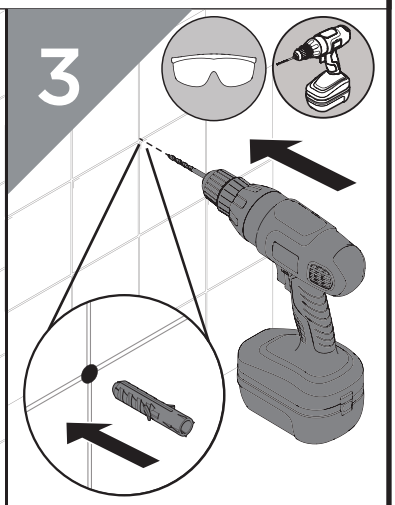

Drill the marked holes. Insert wall plugs if necessary.

4

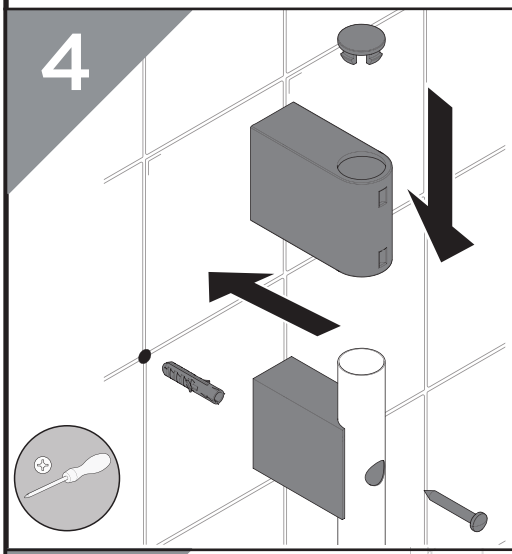

Line up the wall bracket and riser rail with the centre of the fixing hole. Screw into place and cover with the bracket cover and cap.

5

Repeat Step 4 and secure the bottom bracket into place.

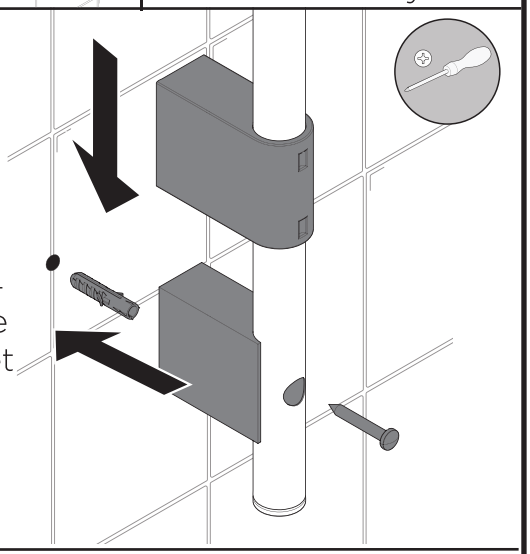

6

Connect the hose and handset to your shower, ensuring the washers are in place (if supplied). If a hose retainer or soap dish is supplied, make sure the hose is fed through it.

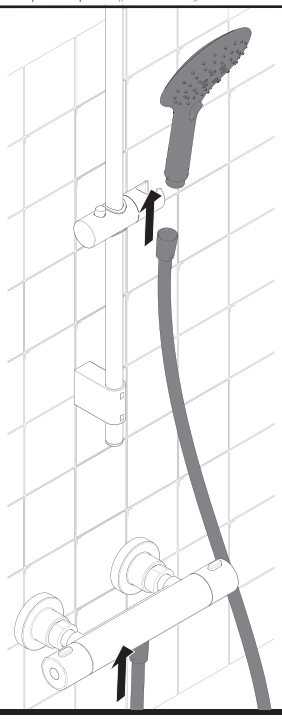

 **Need help? Give us a call on 0330 026 6273 and speak to one of our trained advisors.**

# Installation - Wall Outlets

Choose the location for the wall outlet and create a 25-30mm hole in the wall. Ensure your hose has enough reach from that position to reach. Finish the wall surface.

### With rear access

Fit the wall outlet, ensuring the washers are fitted either side of the wall. Connect the plumbing to the outlet.

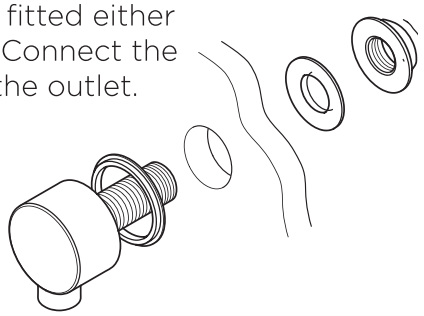

### Without rear access

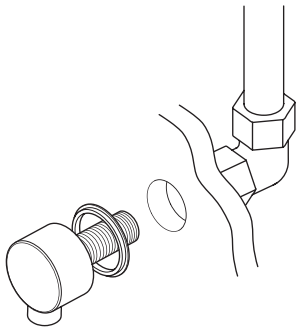

Plumb the copper pipework to the desired location. Screw the wall outlet into the 1/2" female connection, using a suitable thread sealant and ensuring the rubber seal is fitted to the back of the wall outlet.

# General Cleaning

Bristan products are made from premium materials, with hand polished, PVD, EPD or electroplated finishes.

Your product should be regularly cleaned with warm water, a mild pH-neutral liquid soap, and polished with a soft cloth. Any residues from soap, toothpaste, shampoos and shower gels can cause blemishes if not rinsed off straight after use.

Household bleaches and cleaners contain harsh chemicals and may damage the surface finish. Avoid using abrasive cloths, scouring pads, scrub sponges, steel wool or anything similar.

Some surfaces such as nickel and pewter may be affected by the dye found in some cloths, so it is also important to avoid hanging cloths on surfaces.

# Troubleshooting

| Symptom | Cause(s) | Remedy |
|---|---|---|
| No flow or low flow rate | Partially closed isolation valve. | Open isolation valve. |
| | Head of water is below the minimum distance required. | Refer to your specific product's Contents Page for the minimum working pressure/distance required. |
| | Inlet filter in the shower valve is blocked | Refer to the shower fitting instructions for Maintenance steps. |
| | Hot or cold water being drawn off elsewhere causing pressure changes or instantaneous boiler temperature changes. | Do not use other water outlets when using the taps. |
| | Airlock or partial blockage in the supply pipework or hoses. | Flush through pipework to ensure removal of debris and any airlocks. |
| | Shower hose is kinked, causing a blockage. | Un-kink the shower hose and check for any damage, Replace if necessary. |
| | Water supply failure | Investigate water supply. Check your plumbing and heating systems for any faults. |
| Water drip-ping from shower kit | This is normal for a short time after using the shower. | This is caused by residual water tension, the build up of water in the shower kit. |
| | If water continues to drip, possibly due to the ceramic disc valves/ cartridge | Refer to the Maintenance section of your shower instructions to replace the valves/cartridge. |

# Notes

| |
|---|
| Issue: D3 |
| Part Number: FI Adj Kits |

BRISTAN


Bristan Group Ltd.

**UK: Bristan Group, B78 1SG.**
Customer Service: +44330 026 6273
Web: www.bristan.com
Email: enquire@bristan.com

**EU: FM Mattsson AB (publ)**
Box 480
SE-792 27 Mora
Sweden
Email: info@fmmattssongroup.com

# BRISTAN

# Installation Instructions & User Guide

**Please leave these instructions with the end user**

FH SLRD01 C (D4)

## Specifications

### Dynamic Water Pressure

**Min:** 0.2 bar **Max:** 5.0 bar

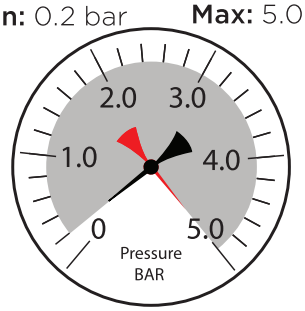


**Maximum Static Pressure:** 10.0 bar

### Inlet Water Temperature

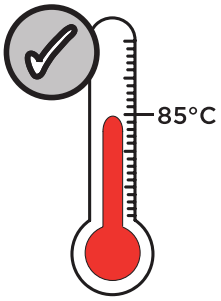


Maximum Hot 85°C

### Inlet Connections

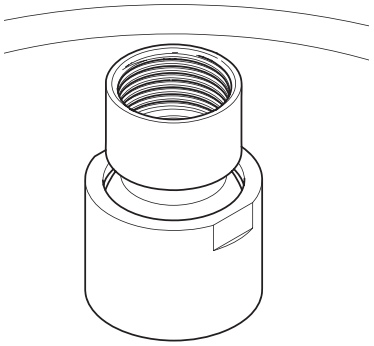

1/2" BSP (female)

## Pack Contents

Filter Washer x1 ☐

Fixed Head x1 ☐

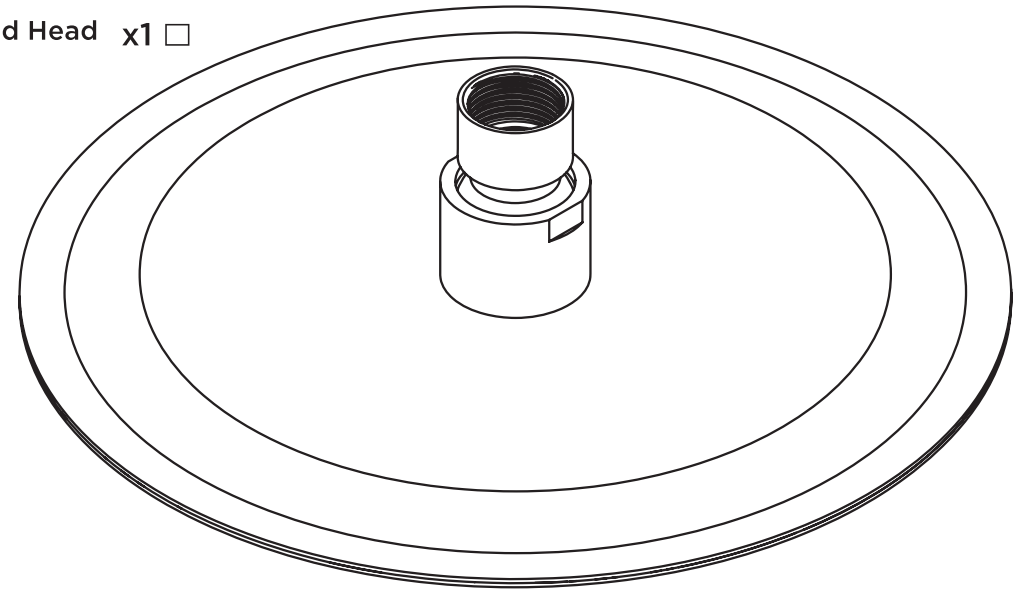

## Prior to Installation

All products manufactured and supplied by Bristan are safe to use provided that they are installed, operated and receive regular maintenance in accordance with these instructions.

This product needs to be installed in accordance with, and meet the requirements of The Water Supply (Water Fittings) Regulations (Northern Ireland) 2009 and The Water Supply (Water Fittings) (Scotland) Byelaws 2014. For full Installation Requirements & Notes (IRN) please visit www.wrasapprovals.co.uk/approvals-directory

Isolation valves must be fitted to the inlet water supplies to ensure ease of future maintenance. Before installing this product the water supply must be thoroughly flushed in order to remove any swarf, solder etc. Full access must be made available for future maintenance/servicing purposes.

If power tools are used do not forget to: - Wear eye protection - Unplug equipment after use

This product must not be modified in any way as this will invalidate the guarantee.

## Spare Parts

To replace any spare parts for your tap, why not scan the QR Code or visit **www.bristan.com** and search for your product.

# Important

**The images shown are for illustrative purposes only.**
The product you have purchased may look different to those pictured in this booklet but will follow the same installation steps.

**Your contents page will be specific to your product.**
If you find your product or any of its components differ from those shown on the contents page, please contact our customer support.

## Installation

**1**

Thread the arm through the wall with the shroud in place.

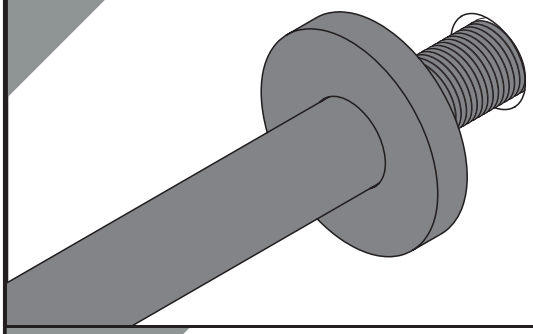

**2**

Secure the arm in position by tightening the locking nut and backnut.

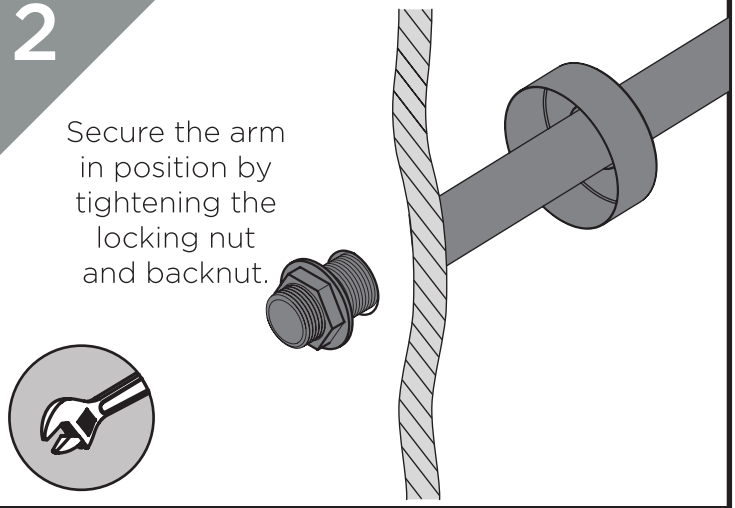

**3**

Connect the outlet pipework to the shower arm using a suitable connector (not supplied).

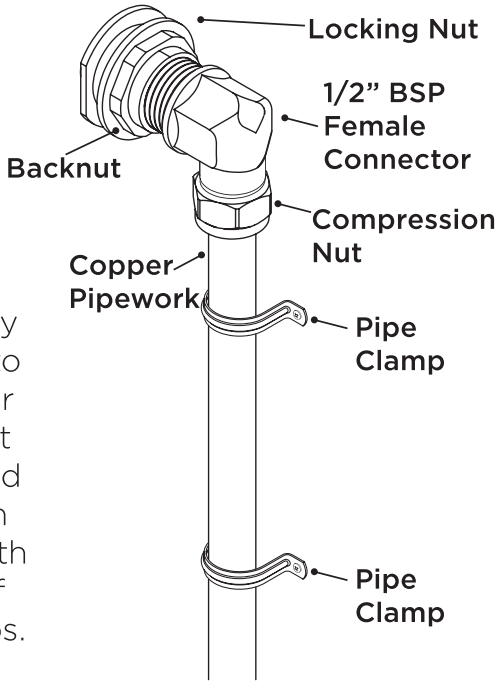


The supply pipework to the shower valve must be rigid and secured in position with the use of pipe clamps.

**4**

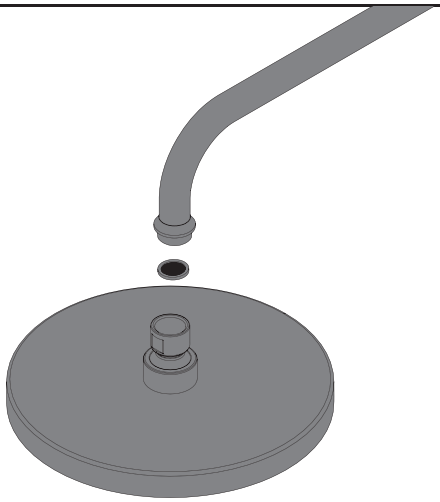

Screw your chosen shower rose onto the shower arm by **HAND ONLY**. Ensure the sealing washer is used where supplied. Turn on the water supply and check all joints and connections for any leaks.

## Typical Installation

* - not supplied
~ - check pack contents if supplied

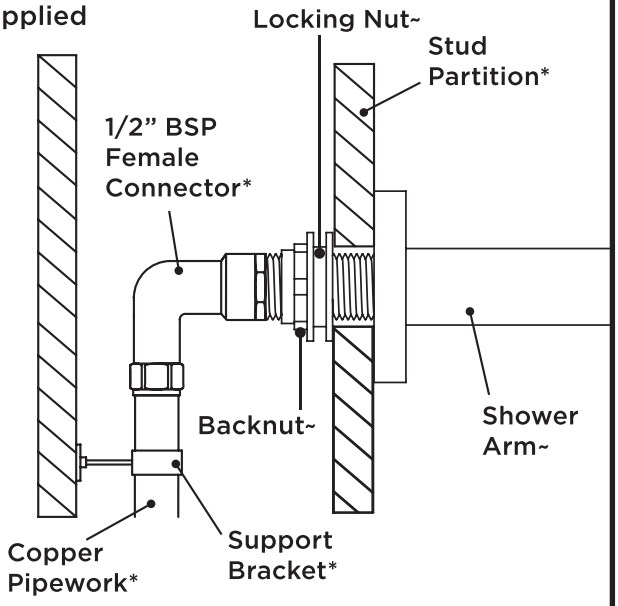

## Alternative Installation

1

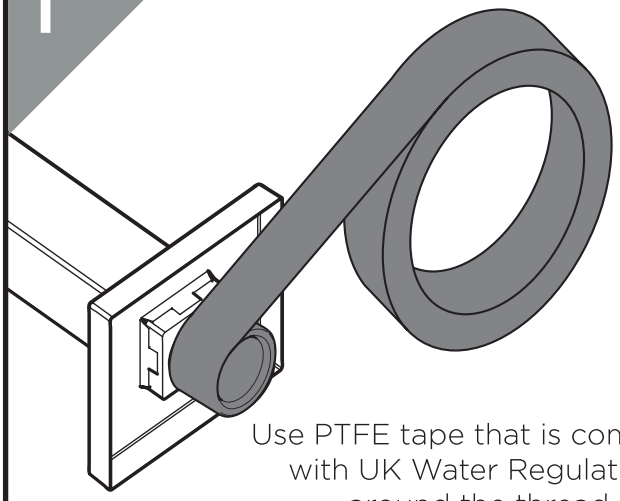

Use PTFE tape that is compliant with UK Water Regulations around the thread.

2

Make a sufficient hole in the desired location to feed through the threaded pipe on the wall arm.

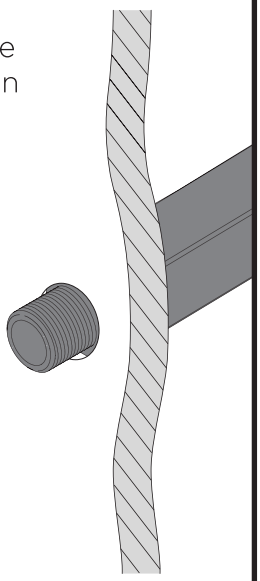

3

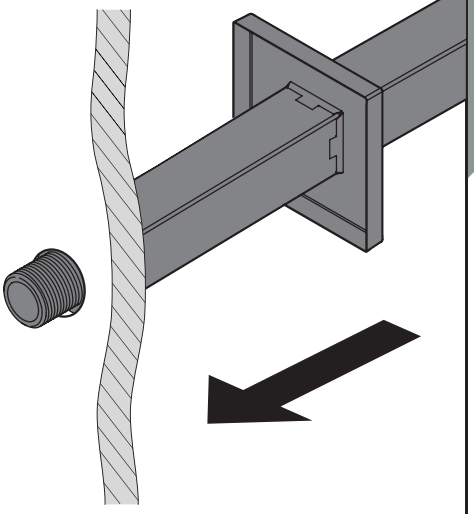

Push the shroud into position.

4

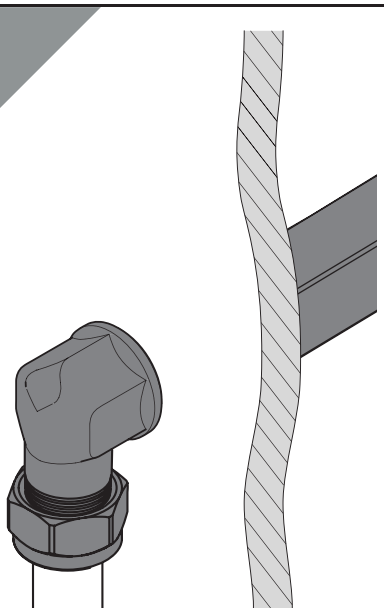

Use a tap connector (not included) to connect to the pipework. Connect the outlet pipework to your desired shower (not supplied) and to your wall arm.

5

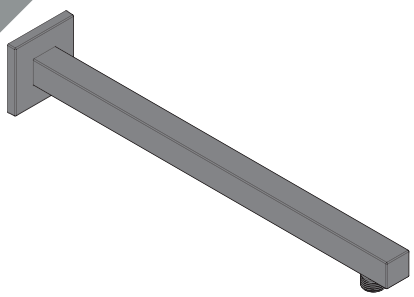

Screw your chosen shower rose onto the shower arm by **HAND ONLY**. Ensure the sealing washer is used where supplied. Turn on the water supply and check all joints and connections for any leaks.

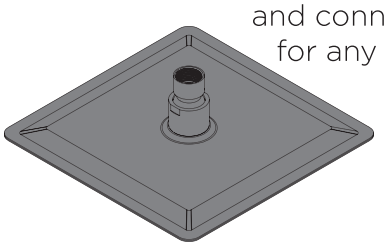

## General Cleaning

Bristan products are made from premium materials, with hand polished, electroplated, PVD or EPD finishes.

Your product should be regularly cleaned with warm water, a mild pH-neutral liquid soap, and polished with a soft cloth. Any residues from soap, toothpaste, shampoos and shower gels can cause blemishes if not rinsed off straight after use.

Household bleaches and cleaners contain harsh chemicals and may damage the surface finish. Avoid using abrasive cloths, scouring pads, scrub sponges, steel wool or anything similar.

## Notes

Please use this space for any notes you or your installer may have regarding the installation/plumbing of this product.

**UK: Bristan Group, B78 1SG.**
Customer Service: +44330 026 6273
Web: www.bristan.com
Email: enquire@bristan.com

**EU: FM Mattsson AB (publ)**
Box 480
SE-792 27 Mora
Sweden
Email: info@fmmattssongroup.com

## Our Guarantee

At Bristan, we want to make things as easy as possible for our customers. That's why we offer solid guarantees on all our products, effective from the date of purchase, to give you peace of mind.

To start your free guarantee simply scan the QR code and register your product.
Alternatively visit www.bristan.com/register.

For any other queries, please call our Customer Service on 0330 026 6273 where our expert team of advisors will be able to offer you any help and advice.
For full guarantee terms and conditions visit **www.bristan.com/service-centre/guarantees**.

# BRISTAN

# Installation Instructions & User Guide

**Please leave these instructions with the end user**

ARM CTRD02 C (D5)

## Specifications

### Dynamic Water Pressure

**Min:** 0.2 bar **Max:** 5.0 bar

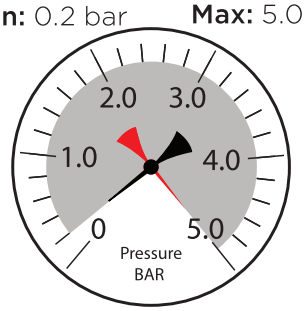


**Maximum Static Pressure:** 10.0 bar

### Inlet Water Temperature

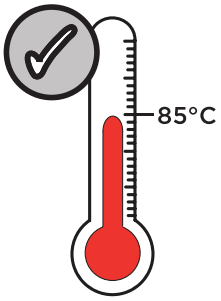


Maximum Hot 85°C

### Inlet Connections

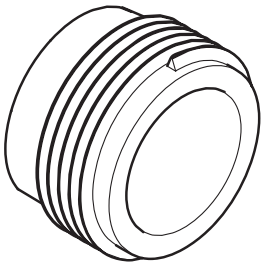

1/2" BSP

## Pack Contents

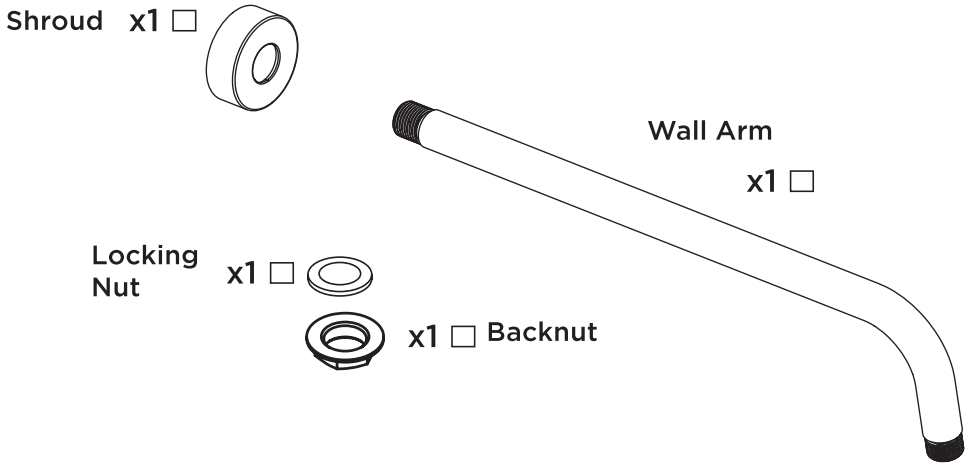


## Tools Required for Installation

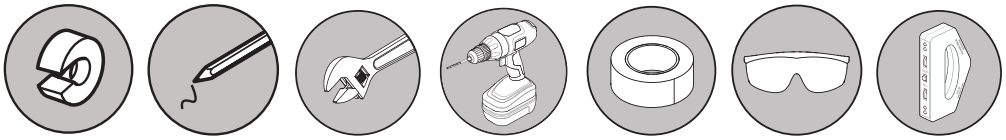

Pipe Cutter | Pencil | Adjustable Spanner | Drill | PTFE Tape | Safety Goggles | Electronic Detector

## Prior to Installation

All products manufactured and supplied by Bristan are safe to use provided that they are installed, operated and receive regular maintenance in accordance with these instructions.

This product needs to be installed in accordance with, and meet the requirements of The Water Supply (Water Fittings) Regulations (Northern Ireland) 2009 and The Water Supply (Water Fittings) (Scotland) Byelaws 2014. For full Installation Requirements & Notes (IRN) please visit www.wrasapprovals.co.uk/approvals-directory

Isolation valves must be fitted to the inlet water supplies to ensure ease of future maintenance. Before installing this product the water supply must be thoroughly flushed in order to remove any swarf, solder etc. Full access must be made available for future maintenance/servicing purposes.

If power tools are used do not forget to: - Wear eye protection - Unplug equipment after use

This product must not be modified in any way as this will invalidate the guarantee.

## Spare Parts

To replace any spare parts for your tap, why not scan the QR Code or visit **www.bristan.com** and search for your product.

# Important

**The images shown are for illustrative purposes only.**
The product you have purchased may look different to those pictured in this booklet but will follow the same installation steps.

**Your contents page will be specific to your product.**
If you find your product or any of its components differ from those shown on the contents page, please contact our customer support.

## Installation

**1**

Thread the arm through the wall with the shroud in place.

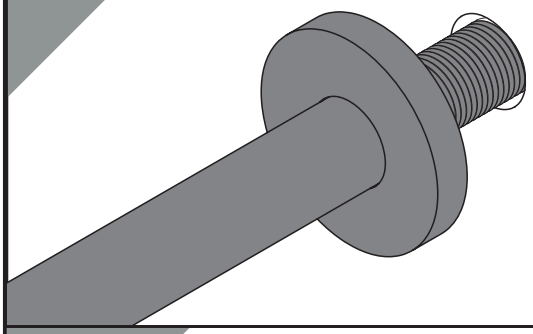

**2**

Secure the arm in position by tightening the locking nut and backnut.

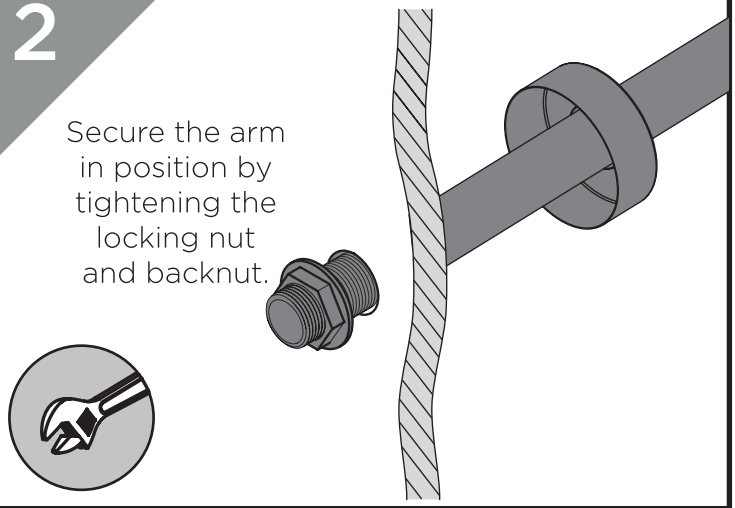

**3**

Connect the outlet pipework to the shower arm using a suitable connector (not supplied).

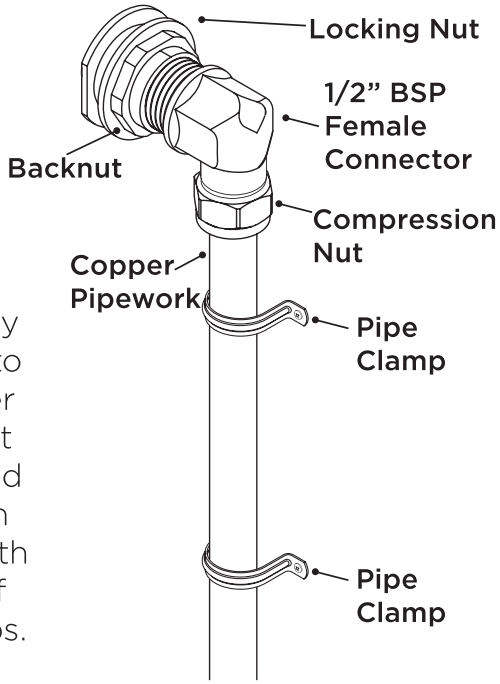


The supply pipework to the shower valve must be rigid and secured in position with the use of pipe clamps.

**4**

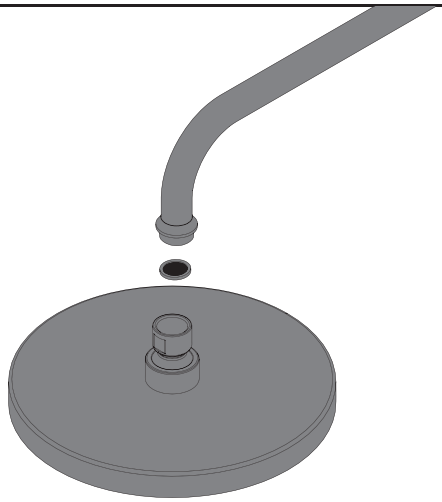

Screw your chosen shower rose onto the shower arm by **HAND ONLY**. Ensure the sealing washer is used where supplied. Turn on the water supply and check all joints and connections for any leaks.

## Typical Installation

* - not supplied
~ - check pack contents if supplied

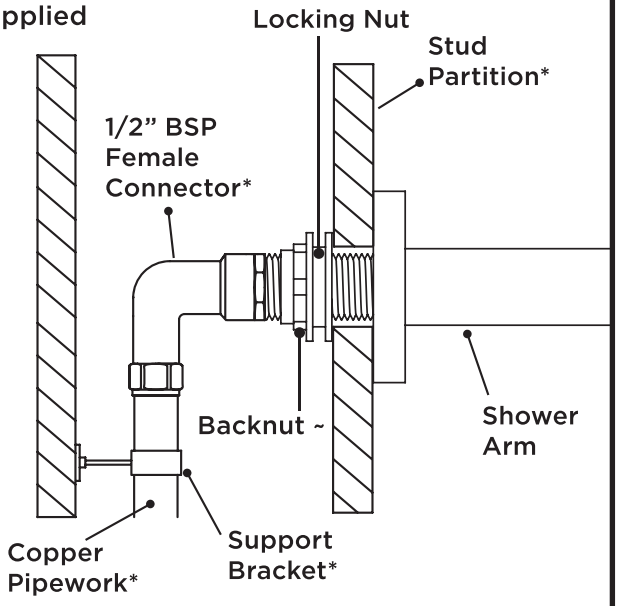

## Alternative Installation

1

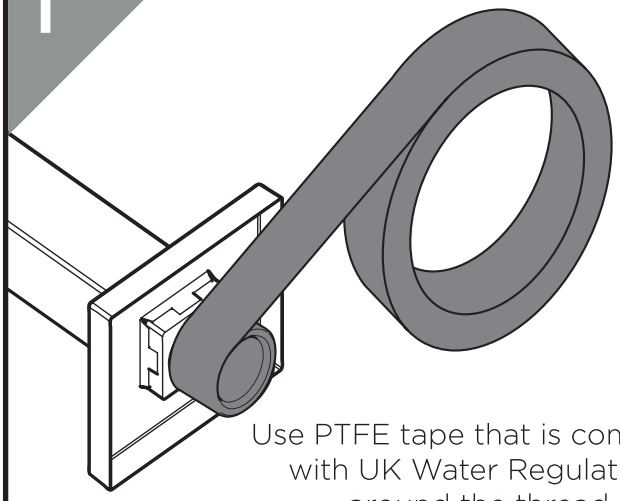

Use PTFE tape that is compliant with UK Water Regulations around the thread.

2

Make a sufficient hole in the desired location to feed through the threaded pipe on the wall arm.

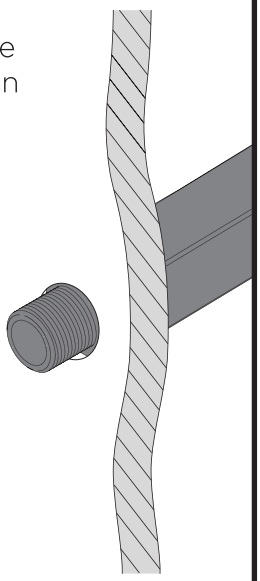

3

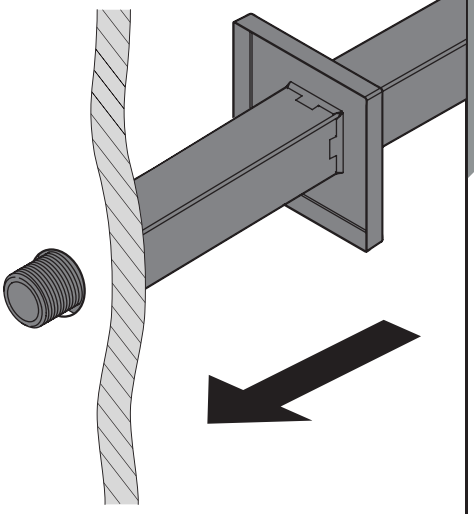

Push the shroud into position.

4

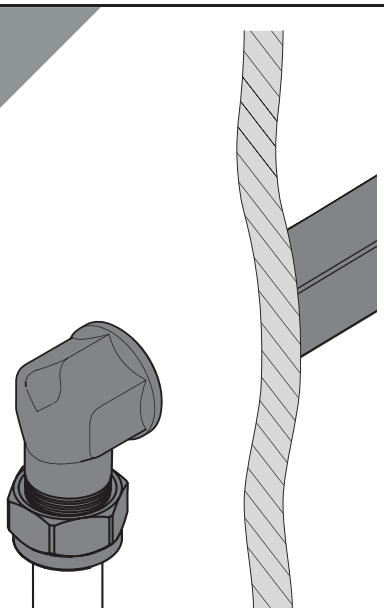

Use a tap connector (not included) to connect to the pipework. Connect the outlet pipework to your desired shower (not supplied) and to your wall arm.

5

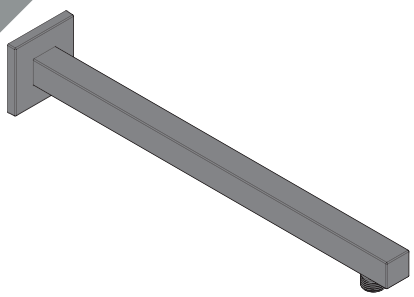

Screw your chosen shower rose onto the shower arm by **HAND ONLY**. Ensure the sealing washer is used where supplied. Turn on the water supply and check all joints and connections for any leaks.

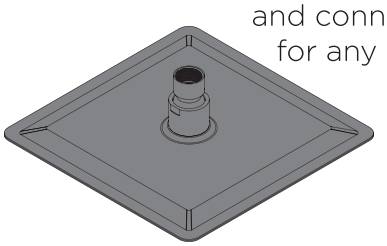

## General Cleaning

Bristan products are made from premium materials, with hand polished, electroplated, PVD or EPD finishes.

Your product should be regularly cleaned with warm water, a mild pH-neutral liquid soap, and polished with a soft cloth. Any residues from soap, toothpaste, shampoos and shower gels can cause blemishes if not rinsed off straight after use.

Household bleaches and cleaners contain harsh chemicals and may damage the surface finish. Avoid using abrasive cloths, scouring pads, scrub sponges, steel wool or anything similar.

## Notes

Please use this space for any notes you or your installer may have regarding the installation/plumbing of this product.

**UK: Bristan Group, B78 1SG.**
Customer Service: +44330 026 6273
Web: www.bristan.com
Email: enquire@bristan.com

**EU: FM Mattsson AB (publ)**
Box 480
SE-792 27 Mora
Sweden
Email: info@fmmattssongroup.com

## Our Guarantee

At Bristan, we want to make things as easy as possible for our customers. That's why we offer solid guarantees on all our products, effective from the date of purchase, to give you peace of mind.

To start your free guarantee simply scan the QR code and register your product.
Alternatively visit www.bristan.com/register.

For any other queries, please call our Customer Service on 0330 026 6273 where our expert team of advisors will be able to offer you any help and advice.
For full guarantee terms and conditions visit **www.bristan.com/service-centre/guarantees**.