BRISTAN

Installation Instructions & User Guide

Please leave these instructions with the end user

Product Code: DSC SHCDIV C (D8)

Specifications

Dynamic Water Pressure

Min: 0.2 bar **Max:** 5.0 bar

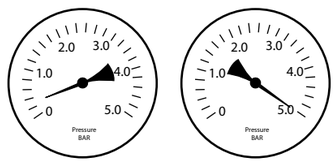

Maximum Static Pressure: 10.0 bar

Inlet Water Temperature

Cold Water Supply

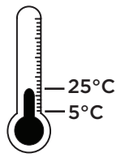

Min: 5°C **Max:** 25°C

Hot Water Supply

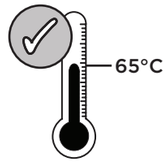

65°C Recommended

IMPORTANT The inlet hot water must be at least 10°C above the required blend temperature.

Inlet Dimensions

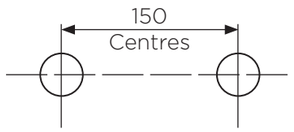

Inlet Connections

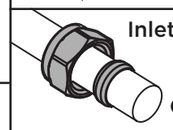

15mm Compression

Tools You'll Need

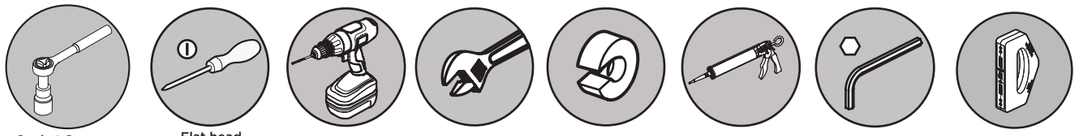

Socket Spanner | Flat head Screwdriver | Drill | Adjustable Spanner | Pipe Cutter | Silicon Sealant | Hexagonal Keys | Pipe & Wire Detector

Prior to Installation

All products manufactured and supplied by Bristan are safe to use provided that they are installed, operated and receive regular maintenance in accordance with these instructions.

This product needs to be installed in accordance with, and meet the requirements of the Water Supply (Water Fittings) Regulations 1999 and current by-laws. For full Installation Requirements & Notes (IRN) please visit **wras.co.uk/directory.**

Isolation valves must be fitted to the inlet water supplies to ensure ease of future maintenance. Before installing this product the water supply must be thoroughly flushed in order to remove any swarf, solder etc. Full access must be made available for future maintenance/ servicing purposes.

Before drilling into walls, check that there are no hidden electrical wires, cables or water supply pipes. This can be checked with the aid of an electronic detector.

If power tools are used do not forget to:
- Wear eye protection
- Unplug equipment after use

This product must not be modified in any way as this will invalidate the guarantee.

If in doubt, contact a registered plumber, your Local Water Authority or the Secretary of the Institute of Plumbing, address as follows:-

The Institute of Plumbing,
64 Station Lane,
Hornchurch,
Essex,
RM12 6NB, Tel: 01708 472791

Cavity Dimensions (mm)

Minimum Cavity Depth: 35mm

Concealing Plate Adjustment Range: 30mm

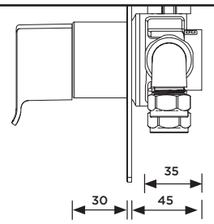

Pack Contents

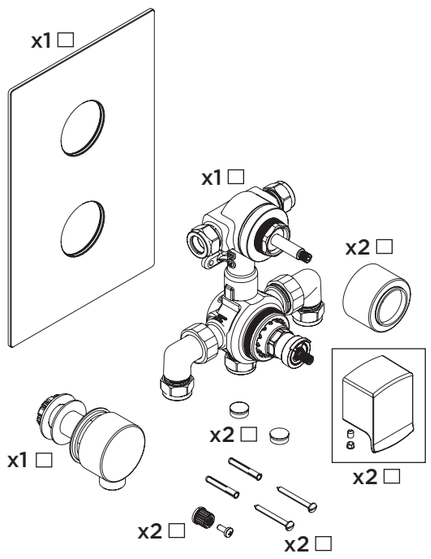

Valve Configuration

1

IMPORTANT If installed in conjunction with combination boiler flow regulators **must** be fitted.

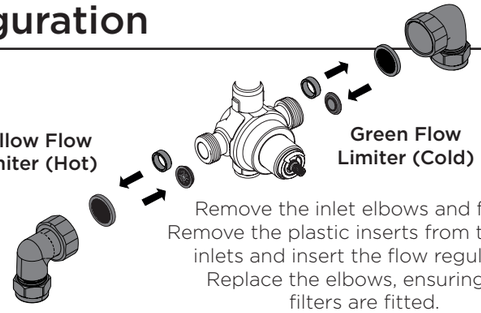

Remove the inlet elbows and filters. Remove the plastic inserts from the valve inlets and insert the flow regulators. Replace the elbows, ensuring the filters are fitted.

2

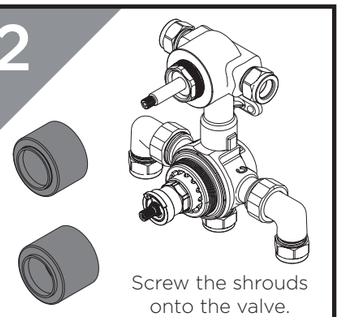

Screw the shrouds onto the valve.

Installation

1

Install suitable batons (if required) onto the rear cavity. Mark the position of the valve and drill and plug holes to suit.

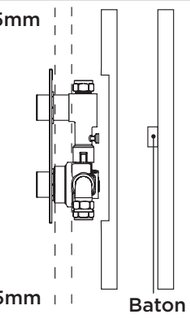

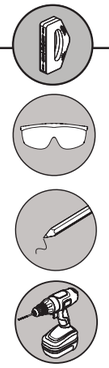

2

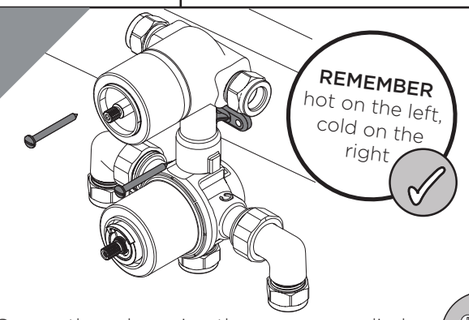

Secure the valve using the screws supplied (solid walls only) or a suitable alternative.

3

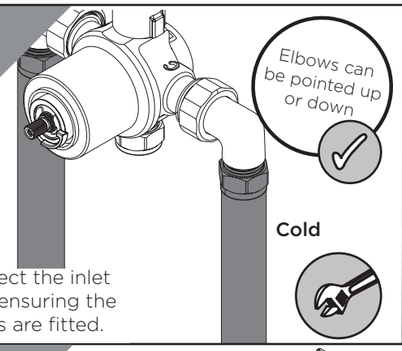

Connect the inlet pipes ensuring the olives are fitted.

4

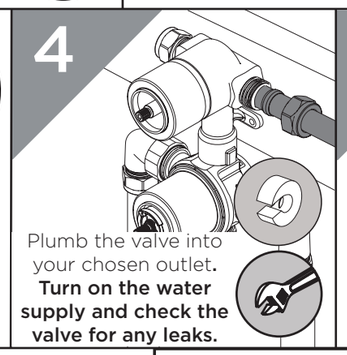

Plumb the valve into your chosen outlet. **Turn on the water supply and check the valve for any leaks.**

5

Draw around the concealing plate as a template, measuring in by 10mm to give clearance. Finish the wall surface. Using a silicon sealant, push on the concealing plate and hold firmly until set.

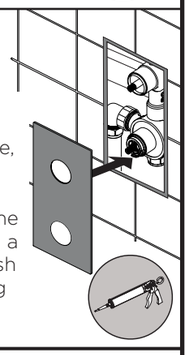

6

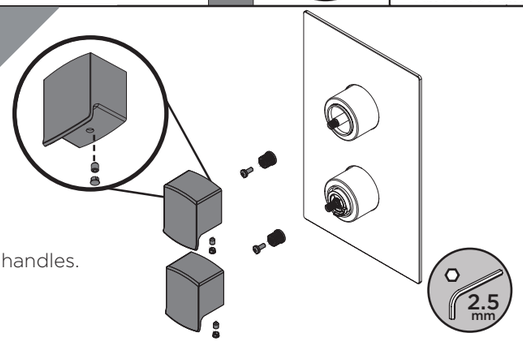

Fit the handles.

Temperature Adjustment

1

Turn the handle to the maximum temperature setting, then remove it.

REMEMBER To service your product!

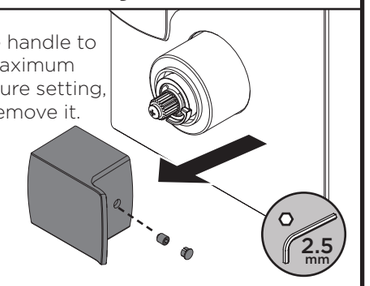

2

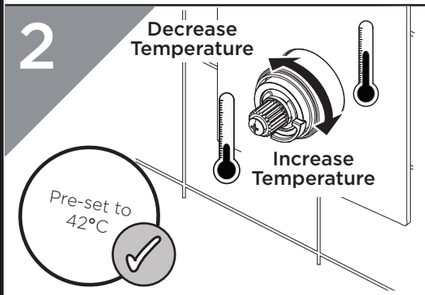

Turn the spindle to increase or decrease the temperature. Check the temperature and adjust until you achieve the desired result.

3

Fit the temperature handle back in the maximum hot position.

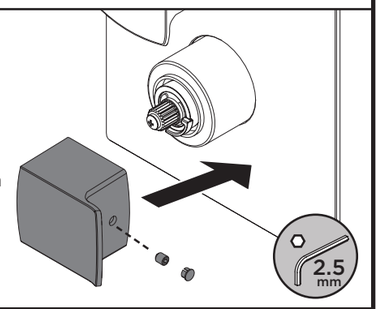

General Cleaning

Bristan products are made from premium materials, with hand polishing and electroplated finishes.

Your taps or shower should be regularly cleaned with warm water, a mild pH-neutral liquid soap, and polished with a soft cloth. Any residues from soap, toiletries etc. should be rinsed off straight after use.

Household bleaches and cleaners contain harsh chemicals and may damage the surface finish. Avoid using abrasive cloths, scouring pads, scrub sponges, steel wool or anything similar.

Some surfaces such as nickel and pewter may be affected by the dye found in some cloths, so it is also important to avoid hanging cloths on spouts.

Operation

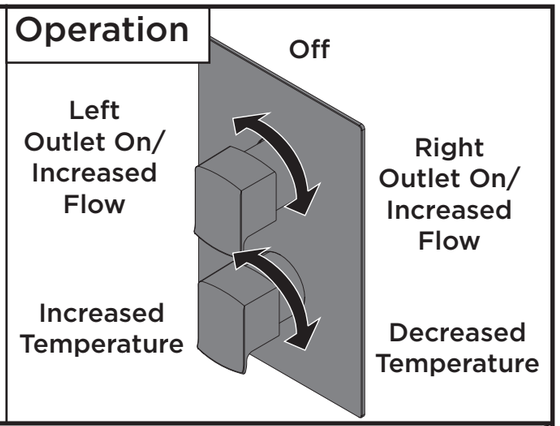

Wall Outlet Installation

Choose the location for the wall outlet and create a 25-30mm hole in the wall. Ensure your shower accessories have enough reach from that position. Finish the wall surface.

With rear access

Fit the wall outlet, ensuring the washers are fitted either side of the wall.

Go to Step 6 in the Installation Steps.

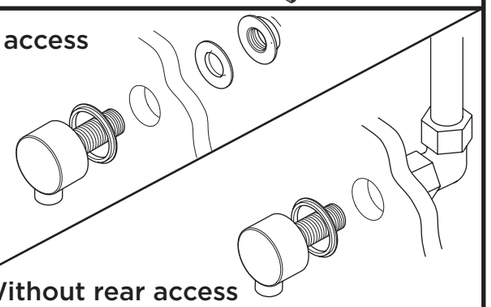

Without rear access

Follow Step 6 in the Installation Steps, fitting a 1/2" female connection at the hole in the wall (not supplied).

Screw the wall outlet into the 1/2" female connection, using a suitable thread sealant ensuring the rubber seal is fitted to the back of the wall outlet.

Servicing Intervals

To reduce the build up of lime scale and to ensure this shower works to its maximum performance we recommend this shower is serviced every 6-12 months depending on the hardness of your water.

Maintenance - Cartridge Cleaning

1

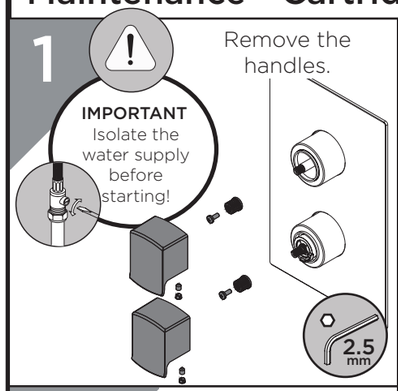

Remove the handles.

2

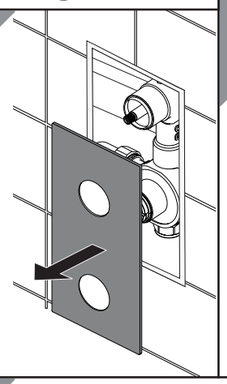

Gently remove the concealing plate from the wall.

3

Unscrew the shrouds. Remove the cartridges and piston.

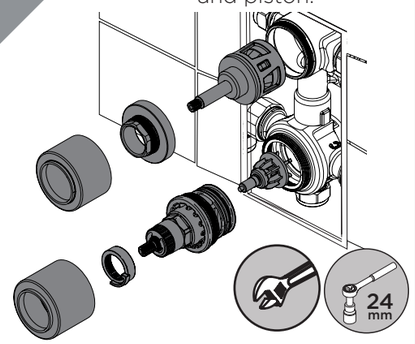

4

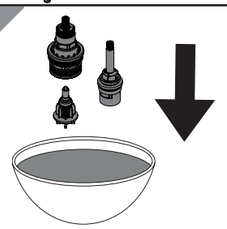

Remove any O-rings and soak all components in de-scaler and wash off in clean water. Examine all seals and replace if needed. Use WRAS approved silicon based grease on all seals.

5

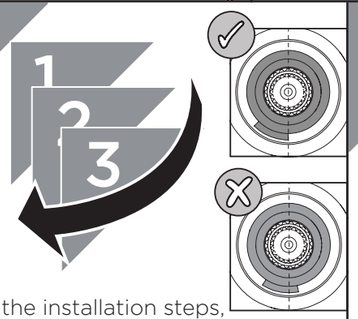

Reverse the installation steps, ensuring the temperature stop is aligned correctly.

6

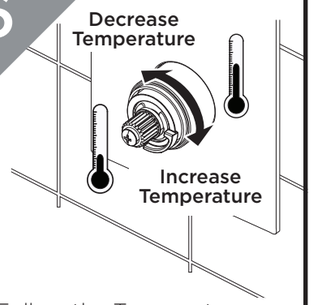

Follow the Temperature Adjustment Steps if required.

Troubleshooting

Symptom	Cause	Remedy
No flow or low flow rate	Partially closed isolation valve.	Open isolation valve.
	Instantaneous water heater cycles on and off as flow rate or pressure is too low.	Increase water flow rate or pressure through system.
	Head of water is below the minimum distance required.	Refer to the specification for the minimum distance required.
	Are the water supply pressures balanced?	If pressures are unbalanced, a pressure reducing valve should be used for optimum performance.
	Hot or cold water being drawn off elsewhere causing pressure changes or instantaneous boiler temperature changes.	Do not use other water outlets when using the shower.
	Airlock or partial blockage in the supply pipework.	Flush through pipework and filters to ensure removal of debris and any airlocks.
	Hot/Cold water supply has failed	Check the hot and cold feeds. The shower will not work if either fails.
Maximum Water Temperature too Hot/Cold	Maximum Water Temperature needs adjusting.	Refer to the Temperature Setting section to set your desired maximum temperature.
Outlet Water Temperature too Hot/Cold	Filter/pipe blockage	Flush through pipework and filters to ensure removal of debris and any airlocks.
	Installtion conditions outside operating parameters.	Refer to the specification for the minimum distance required.
	Hot water temperature is less than 10°C above the required blend temperature	Adjust hot water temperature or wait for water to reheat if a stored water system is used.
	Instantaneous water not igniting because the water flow rate is too low.	Increase water flow rate through the system. Refer to the Maintenance section to clean/check the cartridge and filters for any damage. Contact your boiler manufacturer.
	Instantaneous water not igniting because the water pressure is too low.	Refer to the specification for system requirements. Increase water pressure through the system. Contact your boiler manufacturer.
Only hot/ cold water from Shower Valve	Inlet water supplies are reversed.	Check the water inlet connections are the correct way around: Hot on the left, Cold on the right when viewed from the front. Rework pipework as necessary.
	Filter/pipe blockage	Flush through pipework and filters to ensure removal of debris and any airlocks.
Water dripping from shower	This is normal for a short time after using the shower.	This is caused by residual water tension, the build up of water in the shower.
	If water continues to drip, possibly due to the cartridge	Remove cartridge and clean, refer to 'Maintenance' section before starting any maintenance.
Shower does not turn on	Closed isolation valve.	Open isolation valve.
	Mains water supply turned off.	Turn on mains water supply.

Our Guarantee

At Bristan, we want to make things as easy as possible for our customers. That's why we offer solid guarantees on all our products, effective from the date of purchase, to give you peace of mind.

To start your free guarantee simply scan the QR code and register your product. Alternatively visit **www.bristan.com/register.**

UK: Bristan Group, B78 1SG.
Customer Service: +44330 026 6273
Web: www.bristan.com
Email: enquire@bristan.com

EU: FM Mattsson AB (publ)
Box 480
SE-792 27 Mora
Sweden
Email: info@fmmattssongroup.com

arantees.

026 6273
an.com
ristan.com

BRISTAN