BRISTAN

Thermostatic Recessed Dual Control Shower Valve

Installation Instructions & User Guide

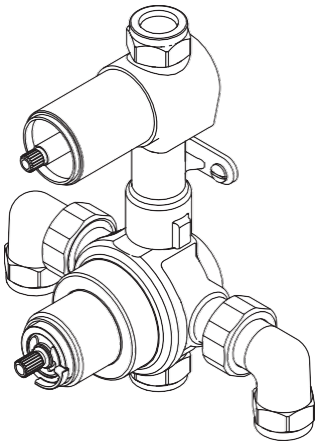

Models covered: N2 SHCVO C / G, AR3 SHCVO C, PM2 SHCVO C, RS SHCVO C, AR3 SHCMT C, DSC SHCVO C

Installer, when you have read these instructions please ensure you leave them with the user.

IMPORTANT: Please keep these instructions for future reference and request of replacement parts

BRISTAN

Contents

Thank you for choosing Bristan, the UK's leading showers and taps expert. We have designed this product with your enjoyment in mind. To ensure that it works to its full potential, it needs to be fitted correctly. These fitting instructions have been created to give you all of the information you need and, if you need any further help, please do not hesitate to give us a call on 0330 026 6273.

Important Safety Information	Page 3
General Information	Page 4
Product Features	Page 5
Specifications	Page 6
Pack Contents	Page 7 – 12
Prior to Installation	Page 13
Installation	Page 14 – 18
Shower Valve	Page 14 - 15
Wall Outlet	Page 16
Shower Kit	Page 17 - 18
Operating the Shower	Page 19
Maintenance	Page 20
Adjusting the Temperature	Page 21
Troubleshooting	Page 22 - 23
Notes	Page 24 - 27
Guarantee	

BRISTAN

Important Safety Information

- Please read these instructions thoroughly and retain for future use.
- All products manufactured and supplied by Bristan are safe provided they are installed, used correctly and receive regular maintenance in accordance with these instructions.
- **If you are in any doubt about your ability to install this product safely, you must employ the services of an experienced qualified plumber.**
- These fittings need to be installed in accordance with, and meet the requirements of the Water Supply (Water Fittings) Regulations 1999 and Scottish Byelaws 2004.
- Remove all packaging and check there are no missing or damaged parts.
- Before starting any installation please consider the following:
    - Before drilling into walls, check that there are no hidden electrical wires, cables or water supply pipes. This can be checked with the aid of an electronic detector
    - If power tools are used do not forget to:
        - Wear eye protection
        - Unplug equipment after use
- ⚠ **Warning**: Before installing the new shower valve, it is essential that you thoroughly flush through the pipework in order to remove any remaining swarf, solder, etc. Failure to carry out this procedure could cause problems or damage to the workings of the shower valve.
- Fitting isolation valves to the inlet feeds is required for ease of maintenance.
- Access **must** be made available to the shower valve/mixer body for maintenance/servicing purposes.
- Do not block the flow of water from the showerhead by placing it (smothering it) on your hand or any other part of the body or foreign object.
- Do not crush or kink the shower hose, this could damage the hose and cause leaks.
- ⚠ **Warning**: Do not operate this product if you suspect it is frozen. Do not site the mixing valve where it might be subjected to freezing conditions.
- These shower valves **must** not be modified in any way as this will invalidate the guarantee.

BRISTAN

General information

This product has been tested to the Water Regulations Advisory Scheme (WRAS) and satisfies the requirements of the Water Supply (Water Fittings) Regulations 1999 and current bylaws.

For full Installation Requirements & Notes (IRN) please visit www.wras.co.uk/directory.

BS7600 recommends the temperature of stored water should never exceed 65ºC. A stored water temperature of 60ºC is considered sufficient to meet all normal requirements and will minimise the build up of lime scale in hard water areas.

If the shower valve is installed at low pressure (tank fed), then the minimum distance from the highest installed position of the showerhead to the underside of the cold tank should be at least 1 metre to ensure adequate performance.

Note: Nominally equal (balanced) inlet supply pressures are recommended for optimum performance.

This shower valve should be installed in compliance with the Water Supply (Water Fittings) Regulations1999 and the Scottish Bylaws 2004.

If in doubt, contact a registered plumber or your Local Water Authority or the Secretary of The Institute of Plumbing, address as follows;-

The Institute of Plumbing,
64 Station Lane,
Hornchurch,
Essex, RM12
6NB
Tel: 01708 472791

Recommended Usage			
Domestic	✓	Heavy Commercial	X
Light Commercial	✓	Health Care	X

BRISTAN

Product Features

1. On / off control

Turn the handle anti-clockwise to turn on and increase the flow of water.

Turn the handle clockwise to turn off the flow of water.

2. Temperature control

Adjustable temperature control.

Turn the handle clockwise for a cooler temperature.

Turn the handle anti-clockwise for a hotter temperature.

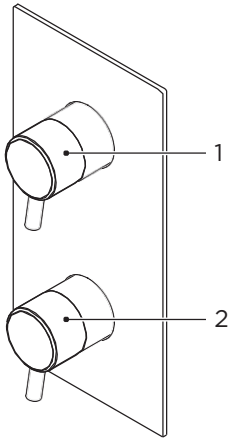

PM2 SHCVO C shown

Note: The N2 SHCVO C/G & RS SHCVO C can either be installed portrait or landscape.

BRISTAN

Specifications

Inlet Connections: 15mm compression with 150mm between centres.

Minimum working pressure: 0.2 bar

Note: This product has been designed to deliver a high flow of water on low pressure systems, however, depending on the installation, type of system and shower accessories, a higher pressure maybe required to optimise the showering experience.

Maximum working pressure: 5.0 Bar
Maximum static pressure: 10 Bar

Note: Static pressure is the build up of pressure when the valve is closed.

Supply Requirements:

Minimum cold water supply temperature: 5°C
Maximum cold water supply temperature: 25°C
Maximum hot water supply temperature: 80°C

Note: The inlet hot water temperature must be at least 10°C above the required blend temperature (e.g. shower temperature 43°C: minimum hot water temperature 53°C).

System Requirements:
Gravity fed hot & cold (equal pressures)
Gravity fed hot & mains cold (differential pressure, maximum ratio 5:1)
Unvented systems
Instantaneous water heater (Combination boiler)
Pumped system

Note: When using a pumped system we recommend that an essex flange is used.

Important: Minimum wall cavity depth: 35mm

Min. – Max. concealing plate thickness: 45 – 75mm

For full dimensional drawings please visit: www.bristan.com

BRISTAN

Pack Contents – N2 SHCVO C / G

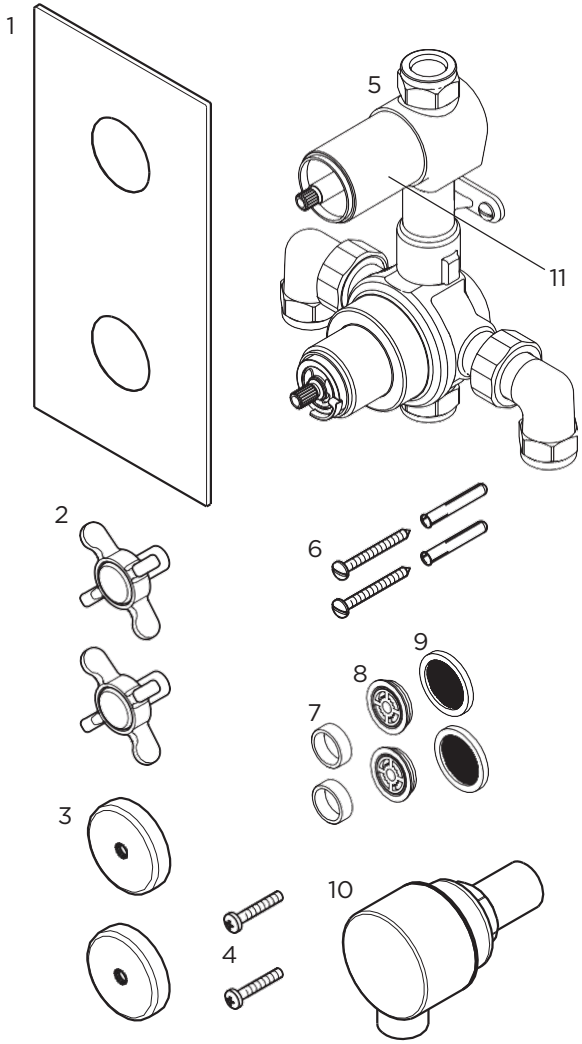

1. Concealing plate x1
2. Handles x2
3. Shrouds x2
4. Screws x2
5. Valve body x1
6. Valve body fixings x2/2
7. Inserts x2
8. Flow regulators x2
9. Filter washers x2
10. Wall outlet x1
11. Shrouds x2

BRISTAN

Pack Contents – AR3 SHCVO C

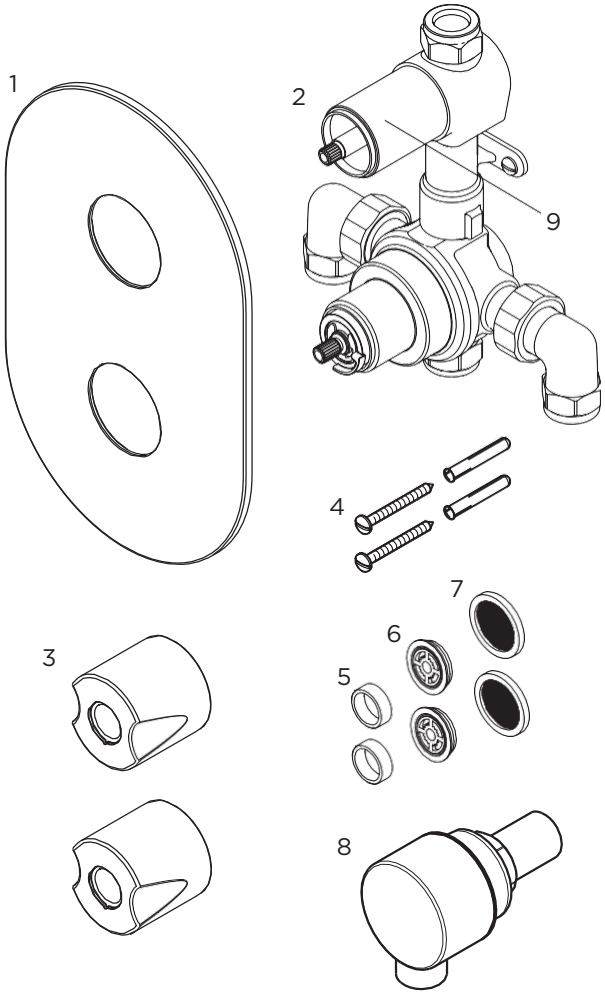

1. Concealing plate x 1
2. Valve body x 1
3. Handles x 2
4. Valve body fixings x2/2
5. Inserts x 2
6. Flow Regulators x 2
7. Filter Washers x 2
8. Wall outlet x 1
9. Shrouds x2

BRISTAN

Pack Contents – PM2 SHCVO C

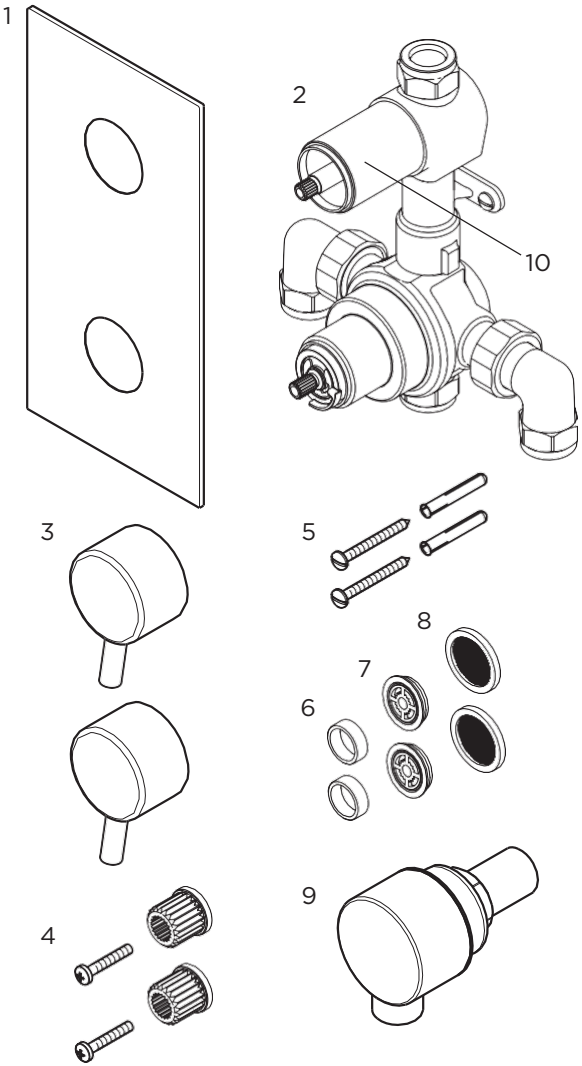

1. Concealing plate x2
2. Valve body x1
3. Handles x2
4. Spline adaptors x2
5. Valve body fixings x2/2
6. Inserts x2
7. Flow regulators x2
8. Filter washers x2
9. Wall outlet x1
10. Shrouds x2

BRISTAN

Pack Contents – RS SHCVO C

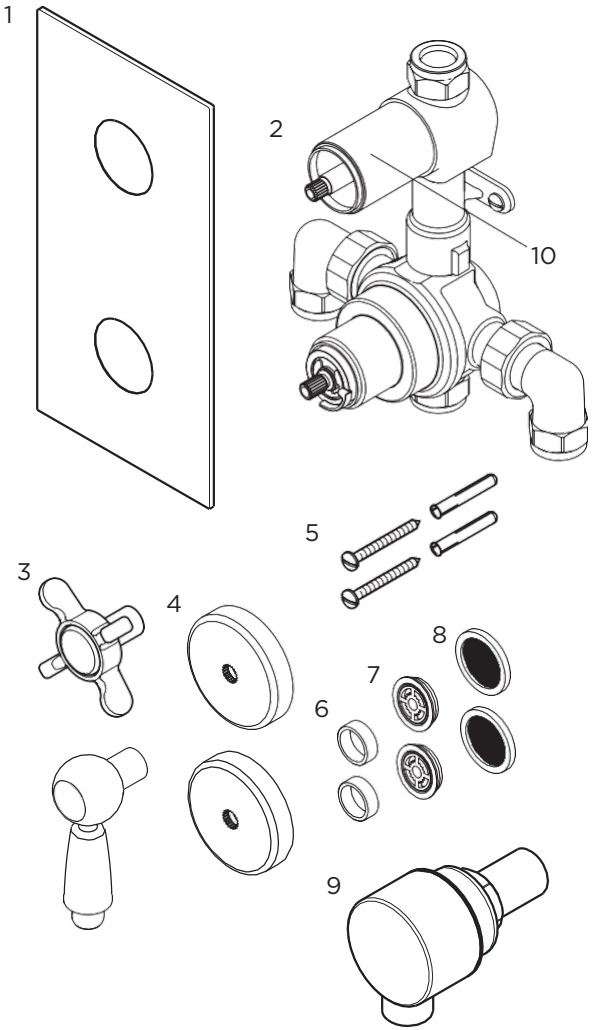

1. Concealing plate x1
2. Valve body x1
3. Handles x2
4. Spline adaptors x2
5. Valve body fixings x2/2
6. Inserts x2
7. Flow regulators x2
8. Filter washers x2
9. Wall outlet x1
10. Shrouds x2

BRISTAN

Pack Contents – DSC SHCVO C

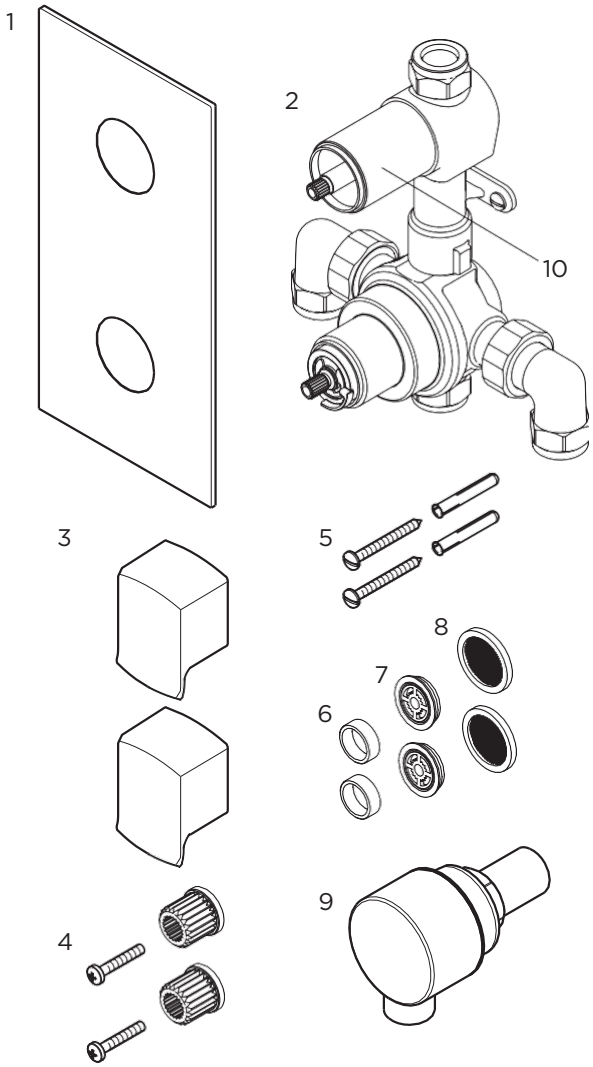

1. Concealing plate x2
2. Valve body x1
3. Handles x2
4. Spline adaptors x2
5. Valve body fixings x2/2
6. Inserts x2
7. Flow regulators x2
8. Filter washers x2
9. Wall outlet x1
10. Shrouds x2

BRISTAN

Pack Contents – DSC SHCVO C

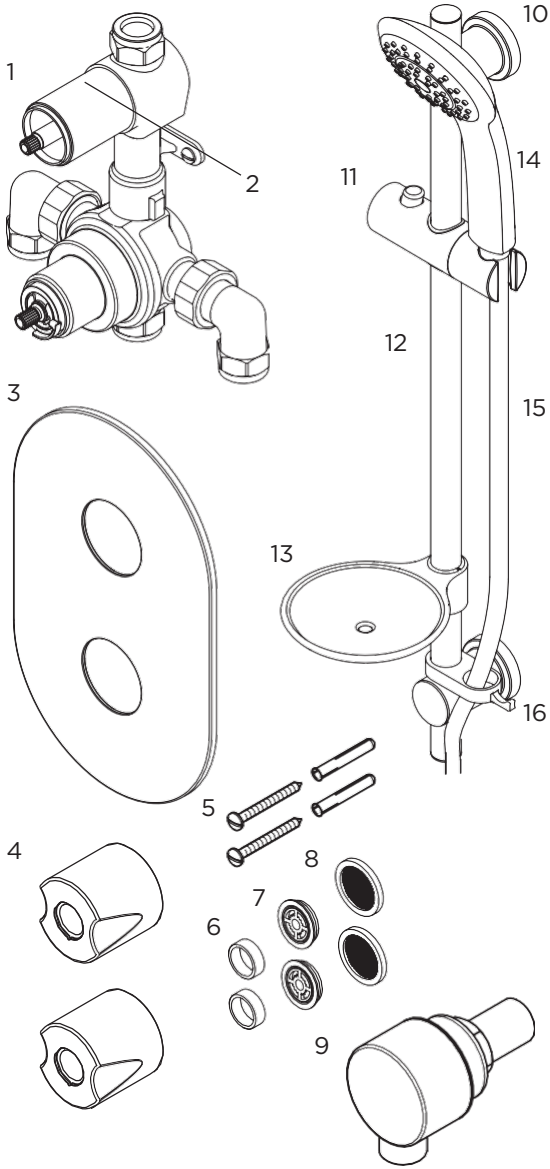

1. Valve body x1
2. Shrouds x2
3. Concealing plate x1
4. Handles x2
5. Valve body fixings x2/2
6. Inserts x2
7. Flow regulators x2
8. Filter washers x2
9. Wall outlet x1
10. Wall brackets & fixings x2
11. Slider bracket x1
12. Riser rail x1
13. Soap dish x1
14. Handset x1
15. Shower hose x1
16. Hose retainer x1

BRISTAN

Prior to Installation

Flow Regulators
This shower valve is supplied with a 5 and 7 litre per minute flow regulator loose in the box which must be fitted if the shower valve is installed in conjunction with an instantaneous water heater / combination boiler.

With both flow regulators fitted and by turning the water heater / combination boiler to its hottest setting, will ensure a sufficiently hot water supply to the shower valve during winter months (in the UK), when the mains cold water supply is at its coldest.

To fit the flow regulators
Remove the inlet elbows ensuring the filter washer is also removed. carefully remove the plastic inserts from the valve inlets and push in the flow regulators. The green 7 litre per minute flow regulator **must** be fitted to the cold inlet and the yellow 5 litre per minute flow regulator **must** be fitted to the hot inlet.

Place the filter washers back into the elbow nuts and tighten the nuts fully onto the outlets.

In the event that this shower valve is not installed with an instantaneous water heater / combination boiler, the flow regulators do not need to be fitted.

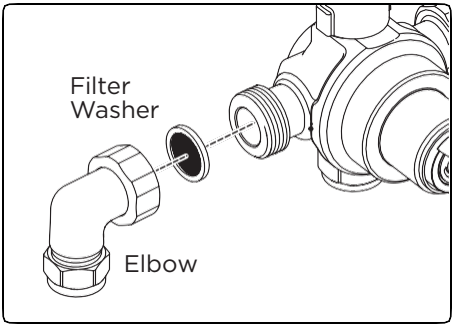

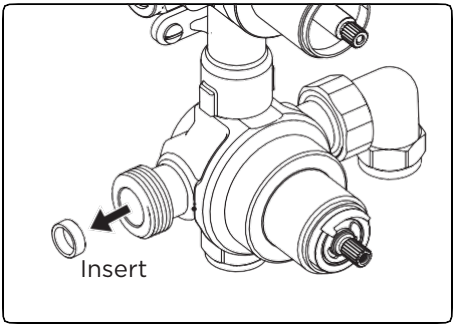

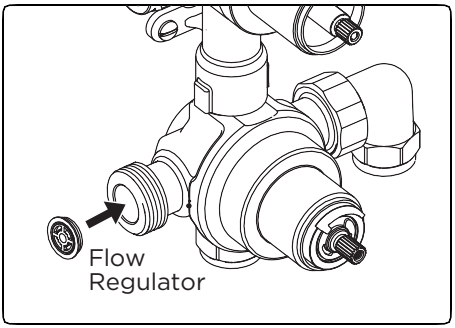

BRISTAN

Installation – Shower Valve

This shower valve is designed for installations where a recessed valve is already installed in the wall cavity and is to be replaced, or for new installations.

Before Installation
Flush through the pipework to ensure removal of any debris. Turn off the mains water supply and close any isolating valves.

1. Attach shower valve to wall
Place the shower valve in the required position and mark the centres of the fixing holes onto the wall.

⚠ **Warning**: Please check for any hidden pipes and cables before drilling holes in the wall.

Drill suitable holes and insert the wall plugs. Securely attach the shower valve to the wall using the screws supplied.

2.Connect water supply pipes
Insert 15mm hot and cold water supply pipes into the inlet connections and tighten nuts, ensuring the olives are fitted.

3. Plumb in outlets
Insert 15mm pipework into the top outlet and plumb into the users chosen product. Ensure the olives are fitted when tightening the nuts.

Important: Water supplies to the mixer must be with hot on the left and cold on the right when viewed from the front.

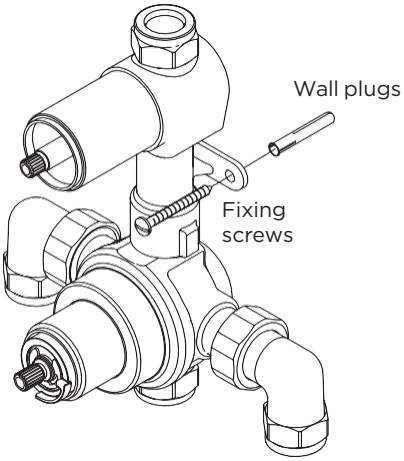

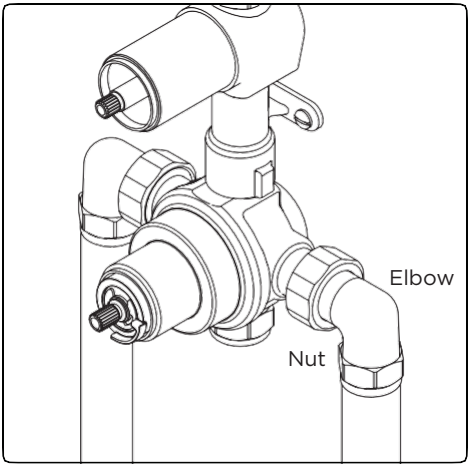

BRISTAN

Installation – Shower Valve

4. Fit concealing plate
Note: The concealing plate can be used as a template by drawing around the plate and measuring in by 10mm to give sufficient clearance.

Run a bead of waterproof silicon sealant around the inner edge of the concealing plate.

Slide the concealing plate onto the shower valve control handles and apply firm pressure to ensure to silicon sealant spreads.

5. Fit Shrouds
Screw the shrouds onto the valve body.

6. Fit Handles
Push the spline adaptors (if required) onto the valve spindles.

Push the handles onto the spline adaptors and secure by tightening the grub screw and push-fit the cap into position.

Important: All future servicing and maintenance of the shower valve, thermostatic cartridge and filters can be done from the front, so rear access is not required.

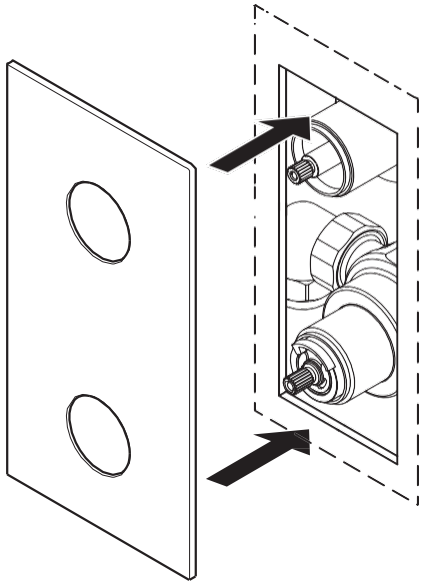

Concealing plate

BRISTAN

Installation – Wall Outlet

Fitting the Wall Outlet
There are two methods of fixing the wall outlet depending on the type of wall:

a: With rear access once wall finished Fit the rubber washer to the back of the wall outlet, place the assembly through a 25-30mm hole in the wall and secure with the backnut ensuring the washer is fitted between the backnut and the wall.

Connect the wall outlet assembly to the shower valve outlet.

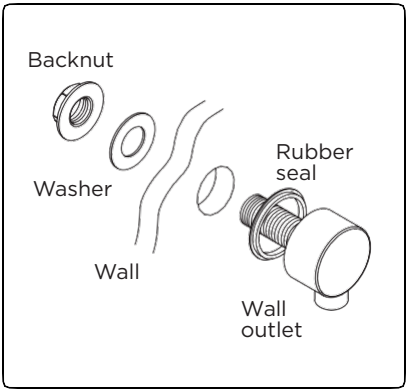

b: Without rear access once wall finished
Fit a '1/2" female connection' (not supplied) within the wall cavity and plumb in from the shower valve. Screw the wall outlet into the '1/2" female connection' using a suitable thread sealant ensuring the rubber seal is fitted to the back of the wall outlet.

Note: The backnut and washer are not required.

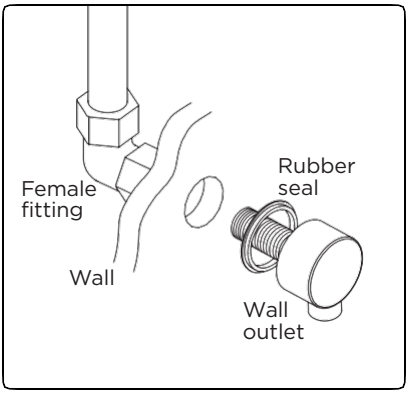

BRISTAN

Installation – Shower Kit

The shower kit is only supplied with AR3 SHCMT C

1. Mark the position

Position the assembled riser rail on the wall, bearing in mind the different heights of people likely to use the shower and the length of the hose when connected to the shower.

With the riser rail vertical, mark the wall bracket positions onto the wall.

Release the slider handle and remove the slider and wall brackets from the rail.

2. Attach wall brackets

Position the bottom wall bracket onto the marked position on the wall surface, ensure it is vertical and mark the centres of the fixing holes onto the wall. Existing fixing holes maybe used as the bottom wall bracket is fully adjustable.

⚠ **Warning**: Please check for any hidden pipes and cables before drilling holes in the wall.

Drill suitable holes and insert the wall plugs. Securely attach the bottom wall bracket to the wall using the screws provided.

Tips: A piece of insulation or masking tape positioned where holes are to be drilled and before marking out the exact position for the fixing holes will help stop the drill bit from wandering, particularly on a tiled surface.

When working near a basin, bath or shower insert plug or cover waste to prevent losing small parts.

Take care not to drop tools/equipment into basin, bath or shower during shower installation.

Note: If replacing an existing riser rail, check to see if the existing holes can be reused or covered by the new wall
brackets. Try to avoid drilling close to the edge of tiles, drill in the middle of the tiles or in the tile joints.

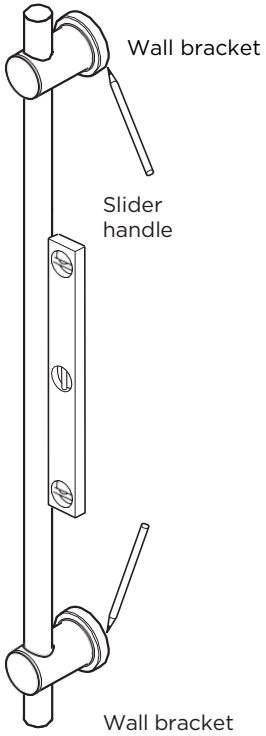

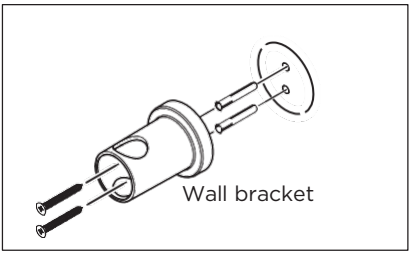

BRISTAN

Installation – Shower Kit

3. Insert riser rail

Insert the plastic bracket insert as shown into the wall bracket and slide the riser rail down through the bottom wall bracket ensuring the two holes in the riser are on the top

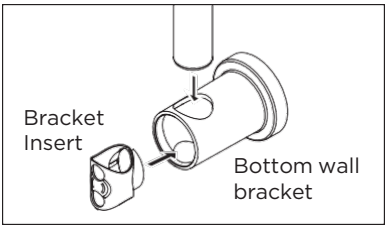

4. Fit hose retainer & slider

Push the hose retainer (first) and slider down onto the riser rial, ensuring they are the correct way up - as shown.

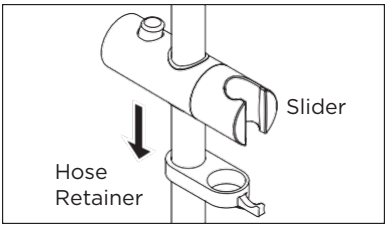

5. Attach top wall bracket

Push the top wall bracket onto the riser rail, ensuring the rail is vertical mark the centres of the fixing holes in the top wall bracket onto the wall surface.

Remove the top wall bracket and drill suitable holes and insert the wall plugs supplied.

Insert the plastic bracket insert into the top wall bracket and refit the wall bracket onto the riser rail. Align the fixing centres up with the holes and secure in place using the screws provided.

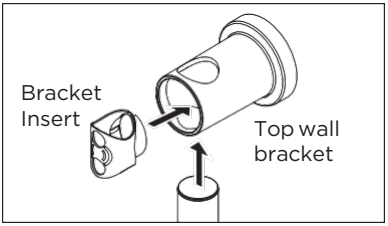

6. Fit end caps

Push-fit the wall bracket end caps onto position to cover the fixings.

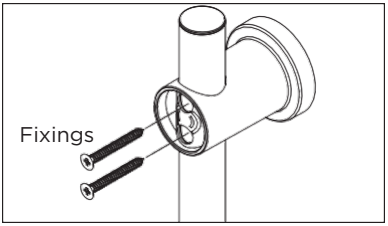

7. Connect shower hose to shower valve

Screw the shower hose onto the mixer valve ensuring that the rubber washer is fitted.

8. Connect shower hose to showerhead

Screw the shower hose onto the showerhead ensuring that the rubber washer is fitted.

Place the showerhead into the slider.

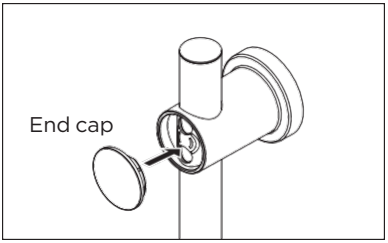

BRISTAN

Operating the Shower

1. On / off control

Turn the handle anti-clockwise to turn on and increase the flow of water.

Turn the handle clockwise to turn off the flow of water.

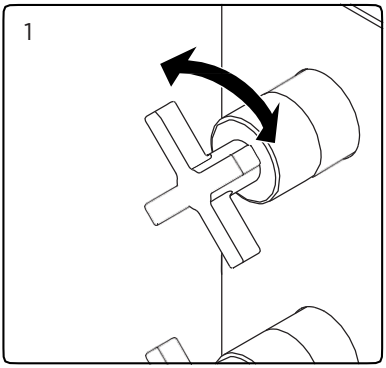

2. Temperature control

Adjustable temperature control.

Turn the handle clockwise for a cooler temperature.

Turn the handle anti-clockwise for a hotter temperature.

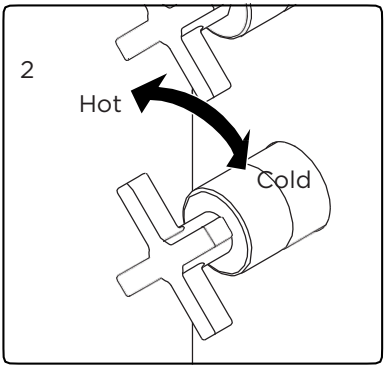

BRISTAN

Maintenance

General Cleaning

Your fitting has a high quality finish and should be treated with care to preserve the visible surfaces. All surfaces will wear if not cleaned correctly, the only safe way to clean your product is to wipe with a soft damp cloth. Stains can be removed using washing up liquid. All bath cleaning powders and liquids will damage the surface of your fitting, even the non-scratch cleaners.

Note: Never use abrasive detergents or disinfectants or those containing alcohol, hydrochloric acid or phosphoric acid.

Cartridge Maintenance

We advise that the shower valve is regularly serviced in hard water areas to maintain the flow of water.

Isolate both hot and cold water supplies to the shower valve by either:

•Turning the water supply off at the mains stopcock or

•Turning off the isolation valves to the shower valve.

1. Remove the temperature handle and plastic stop.

Important: Take note of the position of the plastic stop and handle - They must be refitted in the same position.

⚠Important: Take note of the position of the plastic stop and handle – They must be refitted in the same position

2. Unscrew the cartridge anti-clockwise and remove from the valve body.

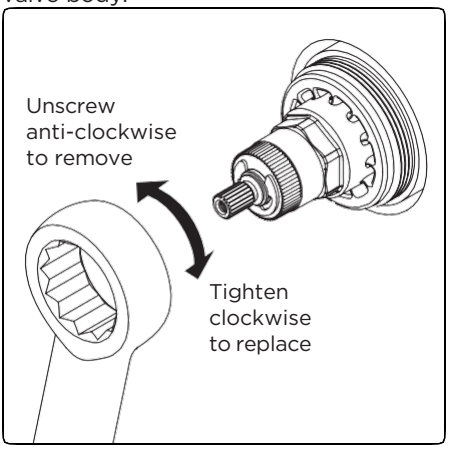

3. Remove the piston and thermostat assembly and place into a bowl. Carefully add hot water (just off the boil) and vinegar to de-scale. Leave in the solution until the water has cooled and rinse with clean water.

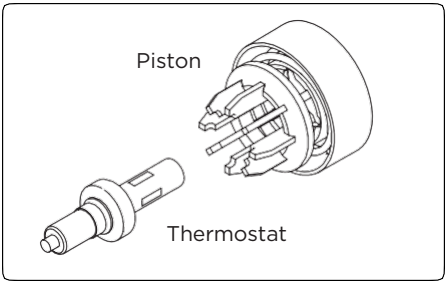

4.Grease the seals with a silicon grease supplied by Bristan (part number: SP-495- 0002) and carefully refit.

5.Refit the temperature stop and handle. Reset the maximum temperature.

BRISTAN

Adjusting the Temperature

Adjusting the Temperature
The shower valve has been factory set to 42ºC with equal (balanced) hot and cold water supply pressures, with the hot water supply at 65ºC.

If your operating conditions are different from those above, the outlet water temperature may differ from the factory setting.

If required the shower valve can be re-calibrated to suit your own temperature requirements.

Set the temperature control to the maximum setting and check the temperature of the water with a thermometer. If the temperature is not correct, re-calibrate the shower valve:

1.Remove the temperature handle but **do not** remove the plastic temperature stop.

2.Turn the spline clockwise to decrease the temperature and anti-clockwise to increase the temperature. Check the temperature and adjust until you achieve the required temperature.

3.Replace the temperature handle ensuring it is fitted back into the maximum position.

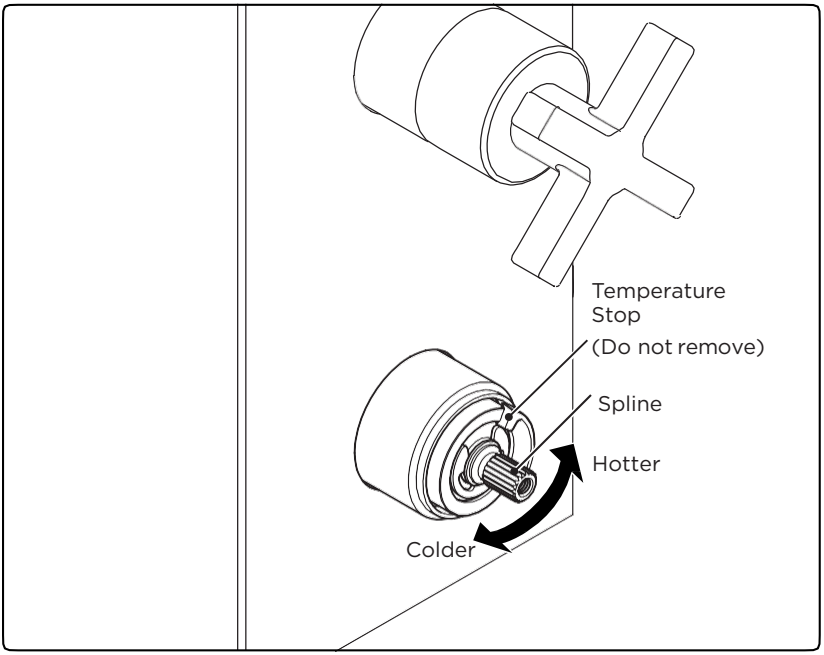

Troubleshooting

Symptom	Cause	Remedy
No flow or low flow rate and / or varying temperatures.	Check showerhead, hose and filters for any blockage.	Clean as necessary, refer to Maintenance section (page 20).
	Partially closed stop or service valve in water supply pipework to the shower valve.	Open stop or service valve.
	Instantaneous water heater cycles on and off as the flow rate or pressure is too low.	Increase water flow rate or pressure through system. Contact the boiler manufacturer.
	Head of water is below the minimum distance required.	Raise the cistern or fit a shower booster pump.
	Inlet filter is partially blocked.	Clean or replace, flush through pipework before refitting.
	Hot or cold water being drawn off elsewhere causing pressure changes or instantaneous boiler temperature changes.	Do not use other water outlets when using the shower.
	Make sure the maintained inlet pressures are nominally balanced and sufficient.	Refer to Specification (page 6).
	Airlock or partial blockage of the pipework.	Flush through pipework to ensure removal of debris and any airlocks.
	No hot or cold water reaching the shower valve.	Check hot and cold feeds (the valve will shut down if either the hot or cold supply fails).
Only hot or cold water from the shower valve outlet.	Partially closed stop or service valve in water supply pipework to the shower valve.	Open stop or service valve.
	Inlet filter is partially blocked.	Clean or replace, flush through pipework before refitting.
	Inlet water supplies are reversed (hot to cold supply).	Check the connections are the correct way round. Hot on the left and cold on the right when viewed from the front. Rework pipework as necessary.

BRISTAN

Troubleshooting

Symptom	Cause	Remedy
Water leaking from showerhead.	This is normal for a short time after turning off.	Adjust angle of showerhead in holder as necessary to vary draining time.
	Shower cartridge failing to close fully, possibly due to water borne debris.	Remove shower cartridge and check. Refer to Maintenance section (page 20) before dismantling shower valve.
Maximum water temperature too hot or cold.	Maximum water temperature set incorrectly.	Reset maximum water temperature. Refer to 'Maximum Temperature setting' in Maintenance section (page 20) and 'Adjusting the Temperature' (page 21)
Outlet water temperature too hot / cold.	Inlet filter is partially blocked.	Check inlet filters for any blockages and clean as necessary.
	Installation conditions outside operating parameters.	Refer to Specification (page 6). Service shower valve as recommended. Refer to Maintenance section (page 20). Refer to 'Adjusting the Temperature' section (page 21).
Water temperature too cold - Maximum water temperature incorrectly set.	Hot water temperature is less than 10ºC above the required blend temperature.	Adjust hot water temperature or wait for water to reheat if stored system is used.
	Instantaneous water heater not igniting because water flow rate is too low.	Increase water flow rate through the system. Check inlet filters and clean or replace. Refer to Maintenance section (page 20). Contact the boiler manufacturer.

BRISTAN

Notes

Please use this space to add any notes you or your installer may have regarding the plumbing system / installation of this product.

BRISTAN

Notes

Please use this space to add any notes you or your installer may have regarding the plumbing system / installation of this product.

BRISTAN

Notes

Please use this space to add any notes you or your installer may have regarding the plumbing system / installation of this product.

BRISTAN

Notes

Please use this space to add any notes you or your installer may have regarding the plumbing system / installation of this product.

BRISTAN

This booklet covers all product codes:

N2 SHCVO C / G
AR3 SHCVO C
PM2 SHCVO C
RS SHCVO C
AR3 SHCMT C
DSC SHCVO C

Helpline
0330 026 6273

Bristan Group Limited

Birch Coppice Business Park, Dordon, Tamworth, Staffordshire B78 1SG

Website:

www.bristan.com

Telephone: 0330 026 6273

Email: enquire@bristan.com

At Bristan, we want to make things as easy as possible for our customers. That's why we offer solid guarantees on all our products, effective from the date of purchase, to give you peace of mind.
To start your free guarantee, simply scan the QR code and Register your product.
Alternatively, visit www.bristan.com/register to register your product via a computer.
For full guarantee terms and conditions visit, www.bristan.com/guarantees

We Know & We Care

FI rev. D8