BRISTAN
TAPS & SHOWERS

Installation, Operation & Maintenance Instructions

Please leave this instruction booklet with the owner as it contains important guarantee, maintenance and safety information

Read this manual carefully before commencing installation.

This manual covers the following products:

Standard 1.5 bar Twin ended shower pump - ST PUMP15TN
Standard 2.0 bar Twin ended shower pump - ST PUMP20TN
Standard 2.0 bar Single ended shower pump - ST PUMP20SG

FOR POSITIVE HEAD APPLICATIONS ONLY

TOP QUALITY 3 YEARS GUARANTEED

PRODUCT DESCRIPTION

Electric motor driven twin ended peripheral pump complete with an automatic control system, consisting of flow switch and electronic control.

APPLICATION

Bristan pumps are designed for single shower or outlet applications in vented stored water systems, inlet pressures to the pump and ambient temperatures must not exceed the values given in the technical specifications.
Bristan Single pumps are not suitable for boosting a single side of a dual flow mixer valve or tap. Consult Bristan for alternative pump.

- **This pump set must not be used for any other application without the written consent of Bristan and in particular, must not be connected directly to the mains water supply.**
- **This appliance can be used by children aged from 8 years and above and persons with reduced physical, sensory or mental capabilities or lack of experience and knowledge if they have been given supervision or instruction concerning use of the appliance in a safe way and understand the hazards involved. Children shall not play with the appliance. Cleaning and user maintenance shall not be made by children without supervision.**
- **Children should be supervised to ensure that they do not play with the appliance.**

Please read installation details carefully as they are intended to ensure this product provides long, trouble free service. Failure to install the unit in accordance with the installation instructions will lead to invalidation of the warranty.

STORAGE

If this product is not to be installed immediately on receipt, ensure that it is stored in a dry, frost and vibration free location in its original packaging.

CONTENTS

	Page
Checklist	3
Important Facts - read before commencing installation	4
Location	5
Pump Connections	9
Electrical Installation	11
Commissioning	13
Maintenance	14
Technical Specification	15
Trouble Shooting	16
Guarantee	17

CHECKLIST

IMPORTANT: With the pump removed from its packaging check for any damage prior to installation. If any damage is found contact Bristan immediately.

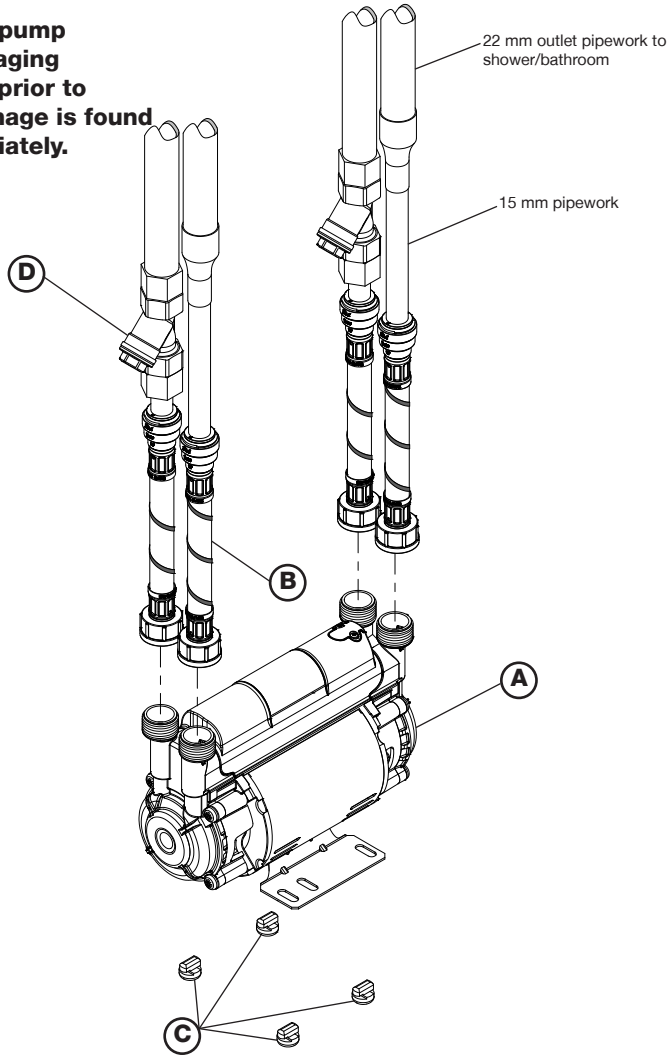

Fig. 1

Item	Description	Qty	Item	Description	Qty
A	Pump	1	C	Anti-vibration feet	4
B	Plain Hose & integral washer	4	D	Inline strainers (not supplied)	2

Your product may vary slightly from the picture above.

Cont ...

1 IMPORTANT FACTS: READ BEFORE COMMENCING PUMP INSTALLATION

A. **Water storage capacity**.

1.11 The hot and cold water storage capacity must be sufficient to meet the flow rates required by the pumped equipment and any other water using fittings and appliances, which may be operated simultaneously.

1.12 Ensure the pump is primed as described in the priming section before starting, damage to the shaft seal will result otherwise. See Section 5 - Commissioning.

B. **Water temperature**

The water entering the pump must be controlled as follows:

1.13 The maximum allowable water temperature is 65 °C.

1.14 The minimum allowable water temperature is 4 °C.

1.15 **DO NOT** fit a pump if the hot water is heated via a method whereby the water temperature cannot be controlled, such as solar or solid fuel you must consult Bristan.

C. **Minimum Flow**

1.16 For this pump to operate correctly there must be a minimum gravity flow of at least 0.8 l/min through the outlet to be pumped.

D. **Pipework - General**

1.17 **Secure pipework:** Ensure pipework to and from pump is independently supported & clipped to prevent forces being transferred to inlet and outlet branches of pump.

1.18 **Flux:** Solder joints must be completed and flux residues removed prior to pump installation **(flux damage will void any warranty)**.

1.19 **Pipework design:** Care should be taken in the design of pipework runs to minimize the risk of air locks e.g. use drawn bends rather than 90° bends.

1.20 **DO NOT** introduce solder flux to flexible hoses, pumps or pump parts manufactured from plastic.

1.21 **DO NOT** allow contact with oil or cellulose based paints, paint thinners or strippers, acid based descalents or aggressive cleaning agents.

1.22 **DO NOT** install a non-return valve, or devices which contain non-return valves, in the suction (inlet) pipework to the pump. The pump must be free to vent to the supply tank at all times.

1.23 **DO NOT** bend the flexible hoses beyond 30°. They must be installed as straight as possible.

1.24 **DO NOT** connect this pump to the mains water supply.

E. **Plumbing Installation Regulations**

1.25 The plumbing installation must comply with the current water and building regulations.

1.26 The plumbing installation must be installed by a qualified person.

1.27 The electrical installation must be carried out in accordance with the current national electrical regulations.

1.28 The electrical installation must be installed by a qualified person.

Cont ...

2 LOCATION - GENERAL

2.11 **Access:** For emergencies and maintenance the pump must be easily accessible.

2.12 **Protection:** The pump must be located in a dry position, frost free and protected from freezing, particularly when installed in a loft (not recommended).

2.13 **Ventilation:** Ensure an adequate air flow to cool the pump. Separate the pump from other appliances that generate heat. An 80 mm (3 “) air gap must be maintained around the pump.

2.14 **Safety:** The motor casing can become very hot under normal operating conditions. Care must be taken to ensure it cannot be touched during operation.

2.15 **Water retention:** Site the pump in a location where in the unlikely event of a water leak, any spillage is contained or routed to avoid electrics or areas sensitive to water damage.

2.16 **Static inlet pressure:** Before deciding where to locate the unit check to ensure the static inlet head between pump and the bottom of the cold water tank (Fig. 4) is at least 0.5 metre and does not exceed the max inlet head of 10 metres.

2.17 **Ambient temperature:** The pump must be sited in a location where the maximum ambient temperature does not exceed 40 °C.

2.18 **Pipework:** For optimum performance in new installations pipework must be 22 mm, reducing to 15 mm only when entering the terminal fitting.
If installing in an existing installation 15 mm pipework may be used but will reduce the pumps performance.

2.19 **Static outlet pressure:** The static outlet head (Fig. 4) must also be within the maximum requirement of 10 metres.

2.20 **Noise:** The anti-vibration mounting feet and flexible hoses which are supplied as standard, and a precaution to reduce noise transmission, however care must be taken when mounting the pump that any noise is not amplified through loose panels or pipework. **Do not screw down the pump**.

2.21 **Direction of flow:** Ensure the water inlet supply is connected to the correct pump ports indicated by INLET arrow/s detailed on the pump rating label Fig. 2.

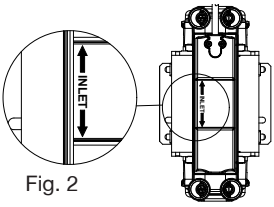

Fig. 2

2.22 **Flexible hoses:** Only use the Bristan hose set supplied with the pump.

2.23 **Isolating valves:** Separate system isolating valves (full bore) must be fitted to allow easy pump service (not supplied).

Cont ...

2.24 **Preferred pump location:** The pump must, for optimum performance, be sited as close as possible to and never more than 4 metres from the HOT WATER cylinder. The pump should always be sited BELOW the HOT WATER take-off from the cylinder. The pump location is also dependent on limitations of the static inlet and outlet heads of the installation. For guidance on limitations and recommended location, consult the following relevant section for hot or cold water installation.

2.25 **Non-Preferred Pump Location:** The pump must be located with at least 0.5 metre flooded suction at all times.
If it is necessary to position the Pump above the secondary tapping on the hot cylinder it is fed by, the risk of introducing air will be increased.
To avoid this risk one of the two following solutions must be adopted:
The use of a Stuart Top Entry (TE) cylinder flange.
The use of a Stuart Side Entry (SE) cylinder flange, which should have the addition of an inverted loop ("U" bend) of 350 mm minimum drop before rising to the pump, located as close as possible to the cylinder wall. This will ensure the pump receives an air free supply and the cylinder vents any air up the vent pipe and not the pump feed (Fig. 3).

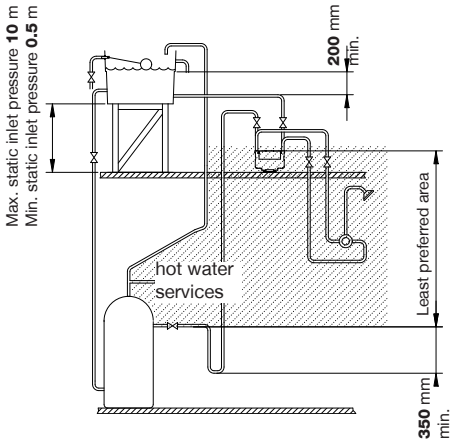

Fig. 3

Cont ...

2 LOCATION - TWIN PUMP

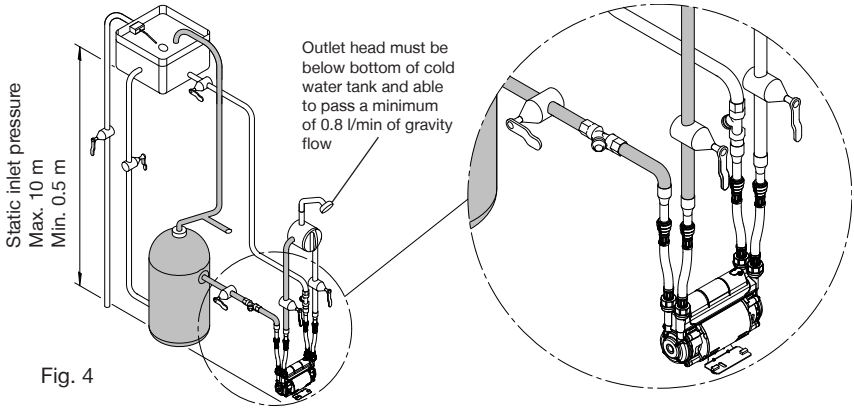

Fig. 4

2 LOCATION - SINGLE PUMP

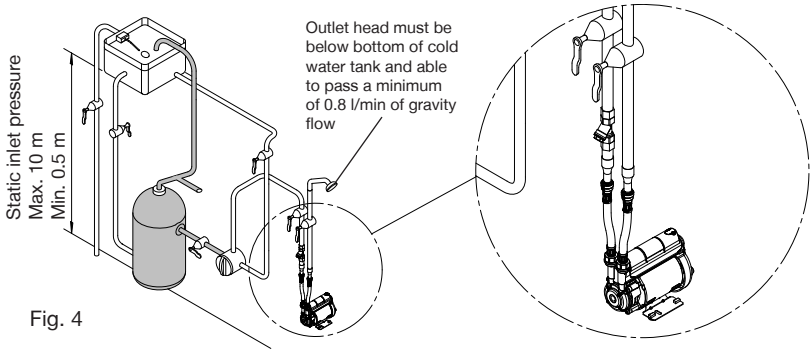

Fig. 4

Cold water connection:

2.26 **The cold water supply: Must be a DEDICATED AIR FREE** supply via a tank connector, and must be positioned at a slightly lower level (25 mm minimum) than the feed pipe to the hot water cylinder.
Do not connect to the mains.

Hot water connection:

2.27 **Hot water supply:** The pump **must be** supplied with a **dedicated feed** direct from the hot water cylinder or storage tank, ensuring an air free connection to the pump. We recommend the use of either the side entry Stuart flange (SE) Part No 27900 or the top entry Stuart flange (TE) Part No 27800 see Fig. 5.

2.28 **Expansion pipe:** When the method of connection is to be made via the expansion pipe, the **BASE** of the cold water storage tank **MUST** be at least 1 metre above the connection/take off of the hot water storage cylinder feeding the pump.

Cont ...

Fig. 5

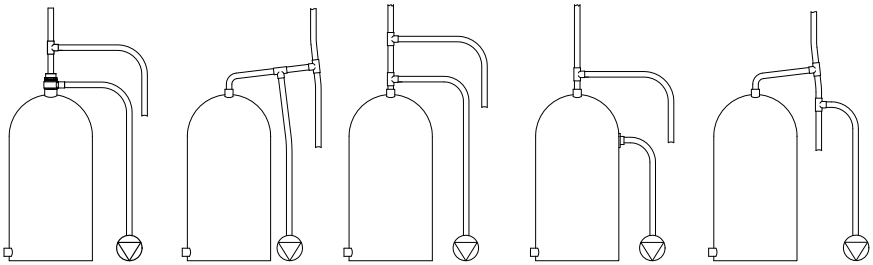

G 1 Stuart Flange (Part No. 27800) with 22 mm pipework to pump reducing to 15 mm.

Off expansion pipe with rising 22 mm offset and 22 mm pipework to pump reducing to 15 mm.

Off vertical expansion pipe with 22 mm pipework to pump.
or
Site installed G 1 tank flange with 22 mm pipework to pump reducing to 15 mm.

Factory installed G ¾ secondary tapping with 22 mm pipework to pump.
or
Side mounted Techflange with 22 mm pipework to pump reducing to 15 mm.

Alternative connection with pump being the first tee on the supply line.

Cont ...

3 PUMP CONNECTIONS

- **Do not use stainless steel, chrome or nickel plated pipe with the flexible hose push-in plumbing connections.**
- **Do not introduce solder flux into the joint or surrounding area as connectors will be attacked and may fail.**
  All solder joints should be completed and flux residues removed before final connection to push-in connections, on the flexible hose.
- **Do not allow contact with oil or cellulose based paints, paint thinners or strippers, acid based descalents or aggressive cleaning agents.**
- **Never operate pump with inlet and/or outlet isolating valves in the closed position. Damage will occur!**

3.11 **Hose to pump:** The pump inlet and outlet ports have moulded fittings which are specifically designed for connection to the G ¾ female running nuts on the flexible hoses. The hose end running nut is fitted with a rubber sealing washer which is held captive within the nut assembly. Locate the hose into position and screw the nut fully onto the fitting by hand. Finally nip tight with pliers (4/5 Nm) for a water tight seal **(do not overtighten)**.

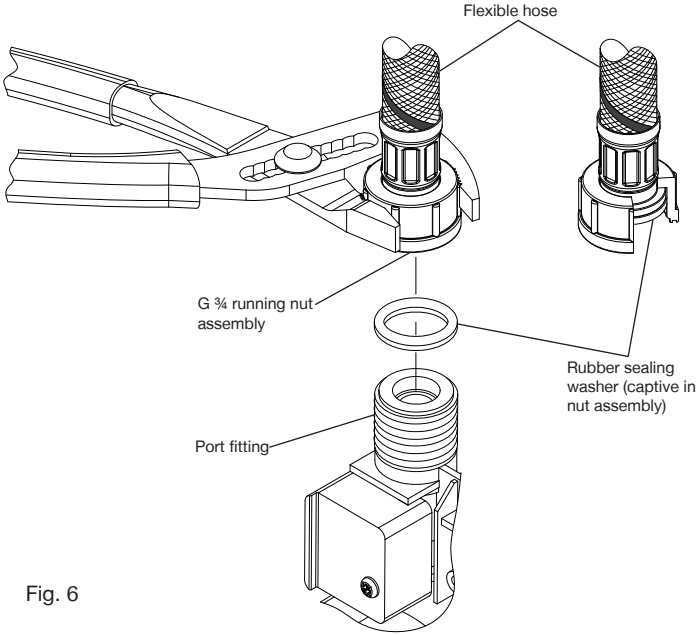

Fig. 6

Cont ...

3.12 **Hose to pipework:**

1. The hoses are fitted with plastic push-in connectors, which must only be connected with the following:
   a) 15 mm diameter copper pipe to BS EN 1057 - R250 (half hard) - Table 3.
   b) 15 mm plastic pipe to BS 7291 part 1 and part 2 (Table 1), or part 3 (Table 1) plus internal support sleeve*.
   * The internal bore of the plastic pipe must be supported against collapse with the pipe manufacturers recommended support sleeve (pipe insert).
   c) Appropriate plumbing fittings that are compatible and will provide a water tight connection.

   Ensure the pipe is free from all score marks and deformities in the area of the insertion depth (Fig. 7) and cut the pipe square removing all burrs and sharp edges to prevent damage to the sealing 'O'-ring.

2. Prior to inserting pipe into fitting mark the insertion depth on the wall of the pipe with a soft pencil at a distance of 31 mm from the end to be inserted (Fig. 7).

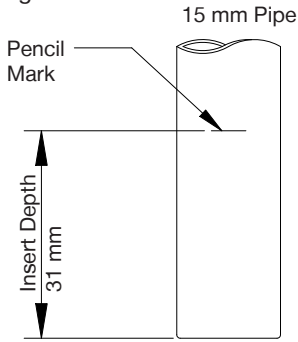

Fig. 7

3. Check in the mouth of the fitting that the 'O'-ring, nylon washer and collet are in position as shown in Fig. 8.
4. Push pipe firmly into fitting, until pencil mark is level with the top of the collet and the pipe stop resistance is felt. Pull on pipe to check it is secure and correctly fitted.

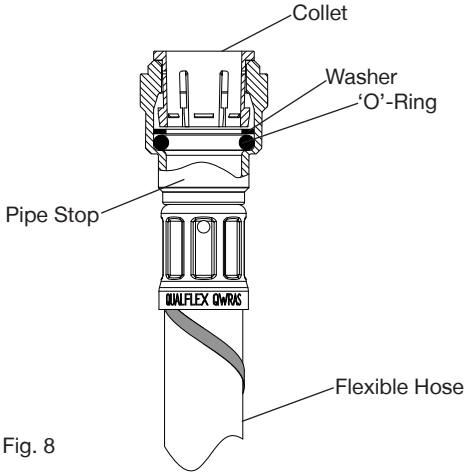

Fig. 8

5. To release the joint, push pipe firmly into fitting, hold collet down and gently remove pipe. If the system has been filled with water care should be taken to isolate pump and towels used to absorb spilled water.

If you have any concern either about using push-in fittings or should the joint leak on final test, isolate the water supplies and contact Bristan Helpline on 0844 701 6273.

4 ELECTRICAL INSTALLATION / EARTHING

4.11 **Regulations:** The electrical installation must be carried out in accordance with the current national electrical regulations and installed by a qualified person.

4.12 **Safety:** In the interests of electrical safety a 30 mA residual current device (R.C.D. not supplied) should be installed in the supply circuit. This may be part of a consumer unit or a separate unit.

4.13 Before starting work on the electrical supply ensure power supply is isolated.

4.14 **DO NOT** allow the supply cord to contact hot surfaces, including the motor shell, pump body or pipework. The cord should be safely routed and secured by cable clips.

4.15 **Adjacent pipes:** Adjacent suction and delivery pipes should be fitted with earthing clamps and connected with earthing wire size 4 mm^2 (Fig. 9).

Diagram of earth continuity connections

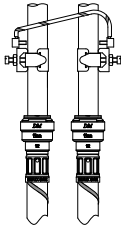

Fig. 9

4.16 **Earthing:** This appliance must be earthed via the supply cord, which must be correctly connected to the earth point located in the terminal box.

4.17 **Pipework:** Copper or metallic pipework must have supplementary earth bonding where the continuity has been broken by flexible hoses or plastic components.

4.18 **Additional earthing:** Certain installations may require additional earthing arrangements such as equipotential bonding. Reference should be made to the relevant regulations concerning this subject to ensure compliance.

4.19 **Connections:** The pump must be permanently connected to the fixed wiring of the mains supply using the factory fitted supply cord, via a double pole switched fused spur off the ring main and **NOT** connected to the boiler or the immersion heater circuits.

4.20 **Wiring of connection unit:**

WARNING: This appliance must be earthed.

The wires in the mains lead (supply cord) are coloured in accordance with the following code:

Green and Yellow: Earth Blue: Neutral Brown: Live

As the colours of the wires in the mains lead of this appliance may not correspond with the coloured markings identifying the terminals in your connection unit proceed as follows:

The wire which is coloured green and yellow must be connected to the terminal in the connection unit which is marked with the letter E or by the earth symbol: ⏚ or coloured green or green and yellow.

Cont ...

The wire which is coloured blue must be connected to the terminal which is marked with the letter N or coloured black.
The wire which is coloured brown must be connected to the terminal which is marked with the letter L or coloured red.

4.21 **Fuse:** The following fuse size should be used with the appropriate pump:

Model	Fuse Size (AMPS)
All Models	5

4.22 **Internal Wiring**

Do not remove terminal box cover. No user serviceable parts inside terminal box. Any service work involving the removal of the terminal box cover must only be undertaken by Bristan or by one of their approved repairers, or similarly qualified persons in order to avoid a hazard.

There are no user serviceable electrical items within the pump.

4.23 **Supply Cord Replacement**

If the supply cord is damaged, it must be replaced by Bristan or by one of their approved repairers, or similarly qualified persons in order to avoid a hazard.

4.24 **Supply Cord Extension**

The pumps are fitted with a supply cord to the following specification:-

HO5VV-F3 G 0.75 mm² - 6 Amp rated cable.

If the supply cord is to be extended, a cord of the same specification should be used. Any connections or junction boxes used should be specifically suited for the application and installed in accordance with the manufacturers instructions.

Cont ...

5 COMMISSIONING

5.11 **System Flushing:** This pump incorporates push-in connectors and plastic components that must not come into contact with solder flux, acid-based descalents or aggressive cleaning agents. The pipework system should be flushed out prior to the pump being connected to ensure any contaminants/chemical residues and foreign bodies are removed from elsewhere in the system.

5.12 **Water Supply:** Always ensure that water storage capacity is adequate to meet the demand. Ensure the pump chamber is full of water before starting the pump. Failure to do this could result in seal damage. To ensure dry running does not occur the pump must be primed as described in priming section below.
Do not run pump dry.

5.13 **Priming:** The pump must be primed (filled with water) before starting. With the power turned off, turn on water supply from the system service valves, prime and vent the pump by opening the pump inlet and outlet isolating valves to allow pump to fill and vent. In the case of twin pumps, both pump chambers must be independently primed.

5.14 **Starting:**

a) Open the outlet being pumped allowing the water to flow until all air has been purged. The pump will be heard to run, turn the outlet off and the pump will automatically stop.
b) Carefully check pump and pipework for leaks whilst pump is running and stationary before leaving the installation unattended.

5.15 **For Further Technical Support:**
Contact Bristan Helpline on 0844 701 6273. Their staff are trained to help and advise you over the phone.

Cont ...

6 MAINTENANCE

- **Do not remove the terminal box cover. No user serviceable parts inside.**

6.11 There are no user serviceable parts available for the pump.

6.12 **Water scale:** As water is heated scale deposits are released in areas of hard water, scale can cause the mechanical seal to stick if left without use for long periods. The pump must be run for at least 5 minutes every four weeks to “exercise” all working parts. Run on cool water. See Section 7 - Technical Specification for note on water temperature. This particularly applies to guest bathrooms used infrequently.

6.13 **Cleaners, Disinfectants and Descalents:**

Acid based descalents and aggressive cleaning agents must not come into contact with the pump. The pump must be removed from the system prior to the use of these products. The system should be flushed to remove all chemicals before the pump is re-connected. If in any doubt as to the suitability of the chemical solutions, please contact Bristan.

Cont ...

7 TECHNICAL SPECIFICATION

Pump Model		S1.5 bar Twin	S2.0 bar Twin	S2.0 bar Single
General	Guarantee	3 years		
	WRAS approval	1504701		
Features	Pump type	Peripheral		
	Mechanical seal	EPDM / PTFE / Al. Oxide		
	Anti-vibration feet	✓	✓	✓
	Flexible hoses	4	4	2
	Dry run protection	✓	✓	✓
Materials	Pump body	Plastic		
	Impeller	Plastic		
Performance	Maximum head (closed valve)	1.5 bar	2.0 bar	2.0 bar
	Performance @ 9 l/min	1.1 bar	1.4 bar	1.0 bar
	Performance @ 18 l/min	0.6 bar	0.8 bar	0.3 bar
	Maximum flow	32 l/min	35 l/min	17 l/min
	Maximum static inlet pressure	10 meters		
	Maximum working pressure*	300 kPa (3 bar)		
	Maximum ambient air temperature	40 °C		
	Min / Max water temperature**	Min 4 °C / Max 65 °C		
	Flow switch sensitivity (approx)	0.8 l/min		
Connections	Pump connections	G ¾ male		
Flexible hoses	Connections (UK model)	G ¾ female x 15 mm push-in x 200 mm long, isolating valves on inlet hoses		
Motor	Type	Induction, auto-reset thermal trip		
	Duty rating	Int (S3) 30 mins on/30 mins off @ 9 l/min (Both ends pumping)		Int (S3) 30 mins on/ 30 mins off @ 9 l/min
Electrical	Power supply / phase / frequency	230 V a.c. / 1 / 50 Hz		
	Current (full load)	1.7 Amps	1.8 Amps	1.0 Amps
	Power consumption	385 Watts	420 Watts	215 Watts
	Fuse rating	5 Amps		
	Power lead (pre-wired)	1.5 metres		
Physical	Enclosure protection	IP22		
	Length	231 mm		208 mm
	Width	132 mm		
	Height (excluding hoses)	166 mm		
	Weight (including fittings)	4.3 Kg		3.3 Kg

Bristan reserve the right to amend the specification in line with its policy of continuous development of its products.

*Note: Max working pressure is the maximum pressure that can be applied to the pump internal casing under any installation conditions.

**Note: In normal circumstances the temperature of stored water should never exceed 65 °C. A stored water temperature of 60°C is considered sufficient to meet all normal requirements and will minimise deposition of scale in hard water areas.

Maximum permissible water temperature 65°C.

7.11 **Noise:** The equivalent continuous A-weighted sound pressure level at a distance of 1 metre from the pump does not exceed 70 dB(A).

8 TROUBLE SHOOTING GUIDE

Symptoms	Probable Cause	Recommended Action
Pump will not start.	Insufficient gravity flow.	Check flow rate minimum of 0.8 l/min required on full hot and cold.
	Electrical.	Check power supply. Check fuse (see fuse section). Check circuit breaker is set. Check wiring connections.
	Pump jammed.	If motor 'Buzzes' switch off power and contact Bristan.
	Integral motor thermotrip activated.	Wait for thermotrip to auto-reset and check that duty point and run time is within specification (see technical specification).
Reduced/intermittent flow.	Incorrect or no anti-aeration flange fitted.	Check that the installation complies with installation instructions.
	Blocked inlet filters.	Clean inlet filters (see maintenance section).
	Hot water temperature set to high.	Reduce cylinder stat setting to 65 °C max.
	Blocked shower head spray plate.	Clean in accordance with manufacturers instructions.
No hot water.	Air locked water feed.	Vent hot water pump of air. Check cold feed to hot water cylinder. Check water level in cold water tank and that all stopcocks and isolating valves are open.
	Heating source not operating.	Check boiler is switched 'on'. Check cylinder thermostat. Check immersion heater. Check cylinder contains hot water.
	All hot water has been used.	Check tank volume is adequate.
	Faulty thermostatic mixer valve.	Consult makers instructions.
Pump runs on with outlets closed.	Jammed flow switch.	Remove outlet hoses and check that flow switch sits in lowest position. Check float for free movement.
	Damaged reed switch or P.C.B.	If pump continues to run, this indicates a closed circuit in either the flow switch reed or P.C.B. in the terminal box. Contact Bristan.
	Leak in system.	Check tap washers, w/c valve washers, pipe joints.
Pump starts with all outlets closed.	Air in system.	Bleed through system without pump running until hot and cold services run with no air.
Flexible hose leaks	Not fitted correctly.	Check that the hose running nut is fully tightened to the pump and that pipework is pushed firmly in to push-fit connection..
	Damaged 'O'-rings.	Check copper pipe ends are cleanly cut and deburred.

8.11 **Environment Protection:** Your appliance contains valuable materials which can be recovered or recycled.
At the end of the products' useful life, please leave it at an appropriate local civic waste collection point.

Cont ...

9 PRODUCT GUARANTEE - PUMPS

At Bristan, we want to make things as easy as possible for our customers. That's why we design products that are easy to fit and use, and that are quality tested to make sure they won't let you down. It's also why we offer solid guarantees on all products, effective from the date of purchase, to give you peace of mind.

All Bristan shower pumps are covered by a **3 year guarantee**. This also includes **1 year labour cover*** which means that, in the unlikely event that you should encounter a problem in the first year after purchase, we'll send one of our expert engineers to fix it.

*Labour is provided by an approved Bristan Care engineer or appointed representative. The guarantee only applies to products with a manufacturing fault. There will be a call out charge for any incidents where no fault has been found with the product, or if the issue is due to poor installation or maintenance.

Register Now and Extend Your Cover

Register your shower pump with us now and we'll extend your labour cover to **2 years - FREE!**

You can register quickly and easily online at **www.bristan.com/register**.

Guarantee Terms and Conditions

This guarantee is in addition to your statutory and other legal rights and is subject to the following conditions:

- The product was purchased within the United Kingdom or Republic of Ireland.
- The product is used in domestic applications only. For commercial or non-domestic applications such as leisure centres, sports clubs, hotels, premises operating as a business, the guarantee period is reduced to 1 year.
- The guarantee applies solely to the original purchaser with proof of purchase.
- The installation must allow ready access to all products for the purpose of inspection, maintenance or replacement.
- Repair under this guarantee does not extend the original expiry date. The guarantee on any replacement parts or product ends at the original expiry date.

Cont ...

- Any part found to be defective during the guarantee period will be replaced without charge, providing that the product has been installed in accordance with the instructions given in this guide and used as the manufacturer intended.

The guarantee does not cover:

- Damage or defects caused by
  - general wear and tear (including special non-chrome finishes; components such as filters, seals, 'O'-rings and washers)
  - incorrect installation
  - repair using non-Bristan parts
  - accidental or wilful misuse
  - corrosion and the use of inappropriate cleaning products
  - system debris including the build up of limescale (which can be controlled through regular servicing and maintenance)
- Compensation for loss of use of the product or consequential loss of any kind.

In the interests of continuous product improvement, Bristan reserves the right to alter product specifications without notice.

The Bristan Product Guarantee does not affect your statutory rights as a consumer.

Need help?

If your product does not function correctly when you first use it, contact your plumber and make sure that it has been installed and commissioned in line with the instructions in this guide. If this doesn't solve the problem, then please visit **www.bristan.com/bristancare** for some helpful hints and tips, or contact **Bristan Care Customer Service on 0844 701 6273** where our expert team of advisors will be able to offer you, or your plumber, help and advice.

Problems during the guarantee period

In the unlikely event that you encounter any problems with the product during the guarantee period, contact **Bristan Care Customer Service on 0844 701 6273** with your proof of purchase or unique guarantee registration number, and we will work to resolve the problem quickly.

Cont ...

Extended Guarantees

If your product is out of its guarantee period, or you would like to extend the guarantee, then please visit **www.bristan.com/bristancare** for extended guarantee options.

Bristan Care Customer Support

Bristan customers also benefit from the support of Bristan Care, our comprehensive customer support package which offers:

Technical support hotline: (Tel: 0844 701 6273) with access to fully trained advisors who can offer installation advice, talk you through quick maintenance checks, or recommend the best course of action to fix any problems with a product.

Expert advice: Find easy to follow 'how to' video guides and technical FAQs online at **www.bristan.com**. Our guides take you step-by-step through many product installations and you can find plenty of easy guides to quick product fixes and servicing.

Spare parts: We hold thousands of spares and we keep them for discontinued products for over seven years. Spares can easily be ordered online at **www.bristan.com** and are dispatched the same day.

Expert plumbing engineers: If we can't solve the problem over the phone or with a spare part, then we'll send out one of our Bristan Care engineers to take a look. Bristan Care engineers provide free support for products that are within guarantee, but are also available to service products that are out of guarantee for a small charge. For details, please call customer services on 0844 701 6273.

DECLARATION OF CONFORMITY

2006/42/EC
BS EN ISO 12100-1, BS EN ISO 12100-2, BS EN 809
2014/35/EU
BS EN 60335-1, BS EN 60335-2-41
2014/30/EU
BS EN 55014-1, BS EN 55014-2, BS EN 55022, BS EN 61000-3-2, BS EN 61000-3-3,
1999/519/EC
BS EN 62233
2011/65/EU

IT IS HEREBY CERTIFIED THAT THE STUART ELECTRIC MOTOR DRIVEN PUMP AS SERIAL NUMBER BELOW, COMPLIES WITH THE ESSENTIAL REQUIREMENTS OF THE ABOVE E.E.C. DIRECTIVES.

RESPONSIBLE PERSON
AND MANUFACTURER

STUART TURNER LIMITED
HENLEY-ON-THAMES, OXFORDSHIRE
RG9 2AD ENGLAND.

Signed. . . . . Business Development Director

Stuart Turner are an approved company to BS EN ISO 9001:2008

BRISTAN
TAPS & SHOWERS
Bristan Group Limited, Birch Coppice Business Park,
Dordon, Tamworth, Staffordshire B78 1SG ENGLAND
Tel: 0844 701 6274 Fax: 0844 701 6275
email: enquire@bristan.com web: www.bristan.com