BRISTAN

Product Code: WVP ARCFH BC

Revision: D1

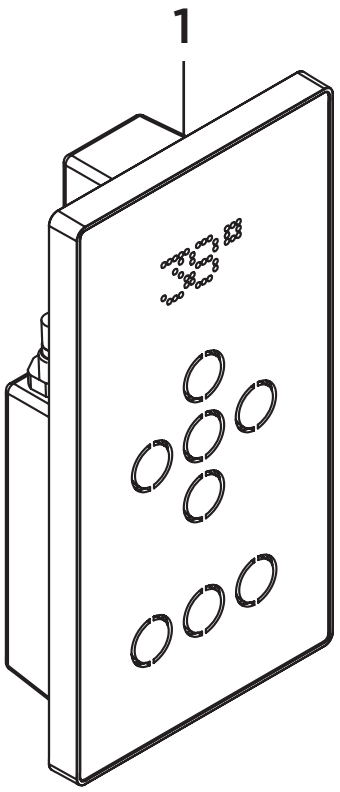

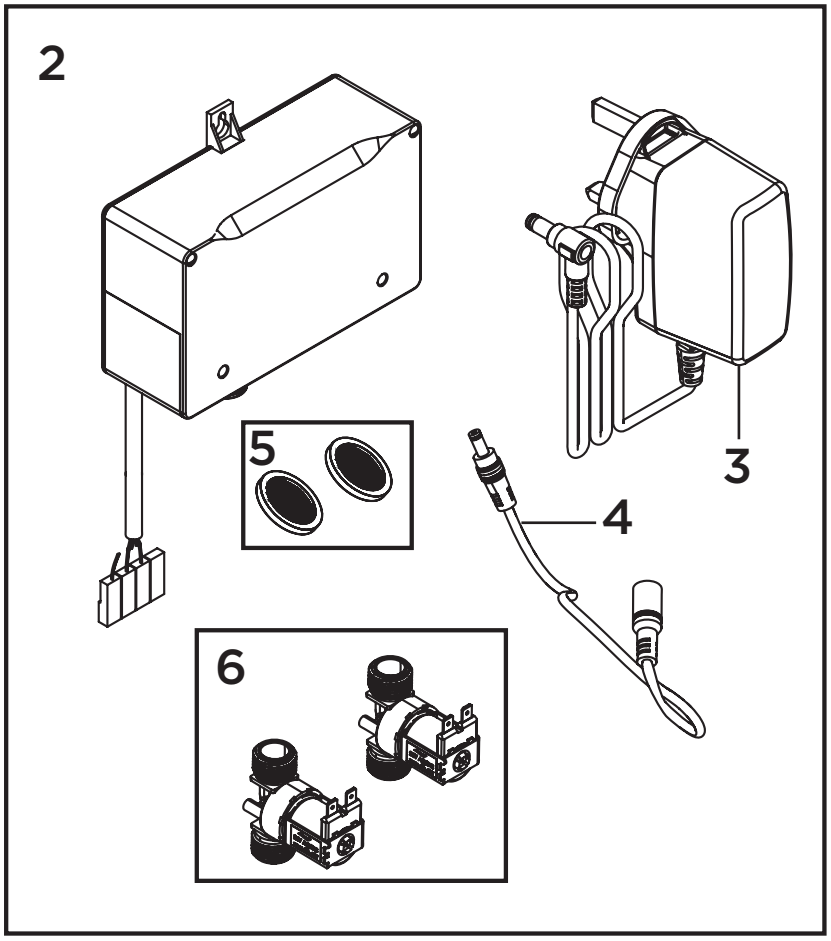

1	Interface Unit
2	Mixer Unit
3	Plug
4	Connection Cable
5	Filters (Pair)
6	Solenoids (Pair)
7	Ceiling Arm
8	Wall Bracket (Pair)
9	Handset
10	Riser Rail
11	Hose
12	Slider
13	Hose Retainer
14	Wall Outlet
15	Fixed Head

BRISTAN

Product Code: WVP ARCFH BC

Revision: D1

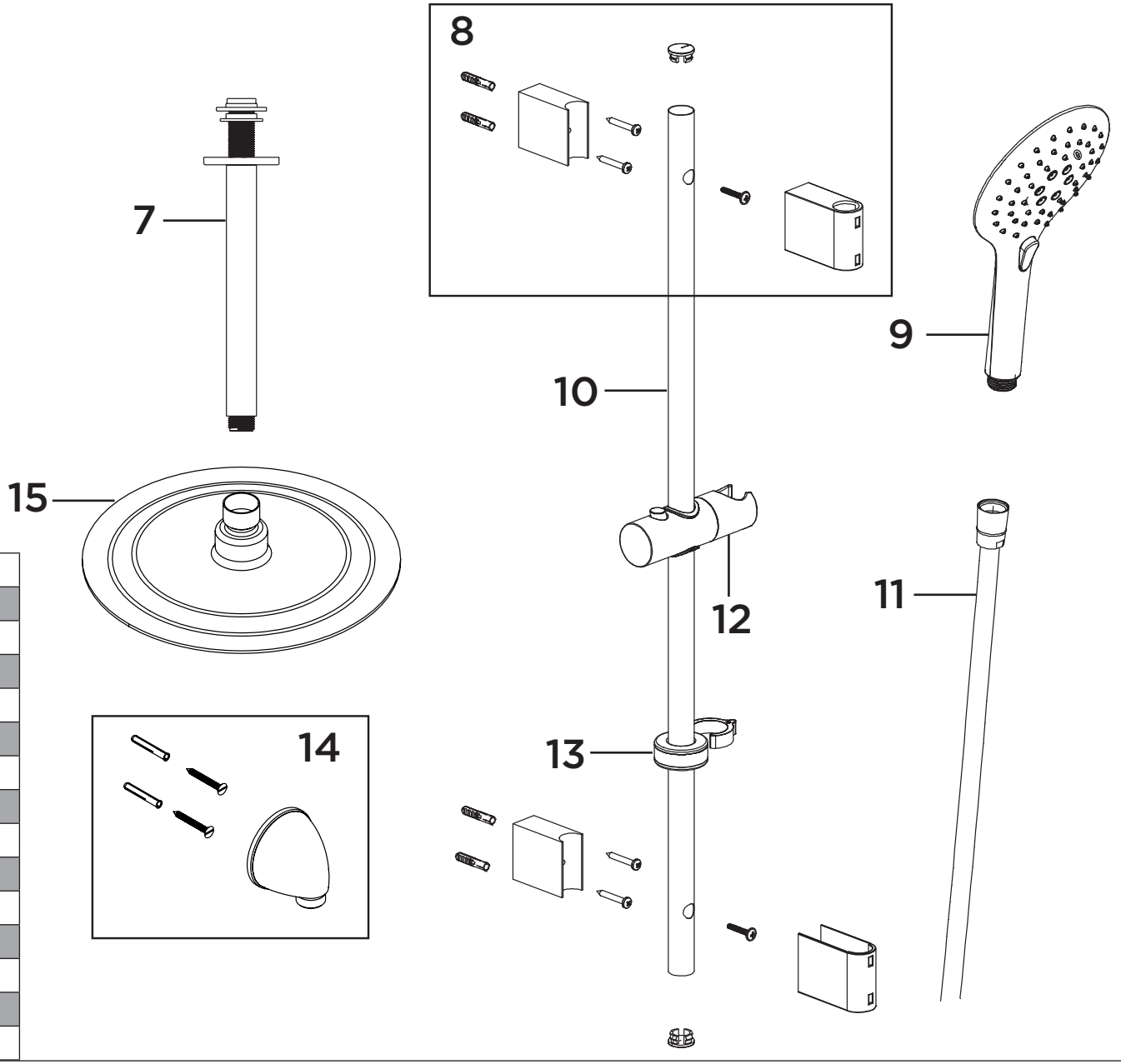

1	Interface Unit
2	Mixer Unit
3	Plug
4	Connection Cable
5	Filters (Pair)
6	Solenoids (Pair)
7	Ceiling Arm
8	Wall Bracket (Pair)
9	Handset
10	Riser Rail
11	Hose
12	Slider
13	Hose Retainer
14	Wall Outlet
15	Fixed Head