# DOCM-S B

## COMMERCIAL Shower Range
### DocM Shower Pack Blue including TMV3 Thermostatic Lever shower kit

## Specification

| | |
|---|---|
| Style: | Contemporary |
| Finish/Colour: | Blue |
| Main Construction Material: | Brass; Aluminium; ABS |
| No of Controls: | 2 |
| Shower Type: | Exposed with Shroud |
| Shower Head Type: | Adjustable |
| Valve/Cartridge Type: | Thermostatic Cartridge |
| Maximum Hot Water Supply Temperature °C: | 65 |
| Maximum Static Pressure: (bar) | 10 |
| Plumbing System Suitability: | Suitable for all plumbing systems |
| Working Pressure Range: | Min: 0.2 bar, Max: 5 bar |
| Connection Inlet: | 15mm Compression |
| Connection Outlet: | 1/2" BSP |
| Isolation Valve Included: | No |
| Check Valve Included: | Yes |

## Features:

- Corrosion resistant aluminium accessories
- Vandal resistant design
- TMV3 exposed OPAC shrouded shower valve included
- Diverter between shower head and handset
- Matching Doc-M accessories available

## Product Certifications:

WRAS APPROVED PRODUCT

WRAS Certificate No: 1812703
WRAS Expiry Date: 30/12/2023

TMV3 NSF SCHEME Certified to NSF TMV3

TMV3 Cert No: NSF2014/0718
TMV3 Expiry Date: 06/07/2023

8.6 L/Min

For more products, visit our website:
http://www.bristan.com

## Dimensions (measurements in mm)

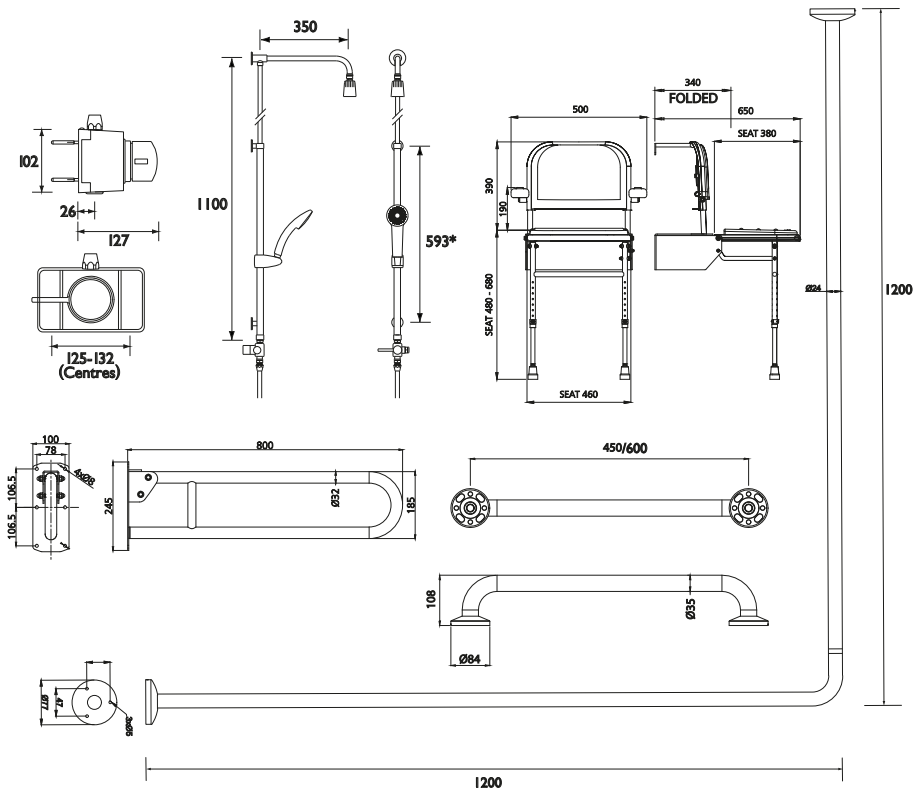


## Flow Rates (l/min)

| System Pressure (bar) | 0.2 | 0.5 | 1 | 2 | 3 | 5 |
|---|---|---|---|---|---|---|
| DOCM-S B | 4.6 | 6.8 | 7.1 | 8.1 | 8.6 | 9 |

TECHNICAL DATA SHEET

TOP QUALITY 1 YEAR GUARANTEED

BRISTAN TAPS & SHOWERS

D2

Bristan, Birch Coppice Business Park, Dordon, Tamworth, B78 1SG. Telephone: 0844 701 6274. Facsimile: 0844 701 6275. Web Site: www.bristan.com Email: enquire@bristan.com.
The information contained on this page was correct at date of issue. Fitting Dimensions are provided as a guide only. Some variation may occur due to manufacturing tolerances. Bristan pursues a policy of continuing improvement in design and performance of its products and so reserves the right to change specifications without prior notice.